NOT CONSTRUCTED AS PART OF CONTRACT

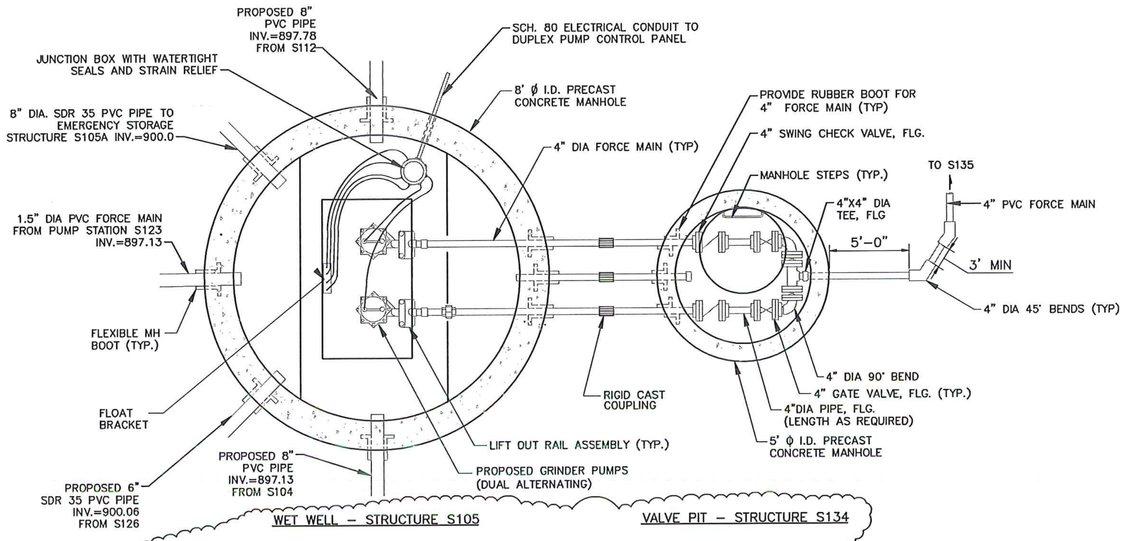

WASTEWATER PUMP STATION S105 & VALVE PIT S134 – PLAN VIEW

NOT TO SCALE

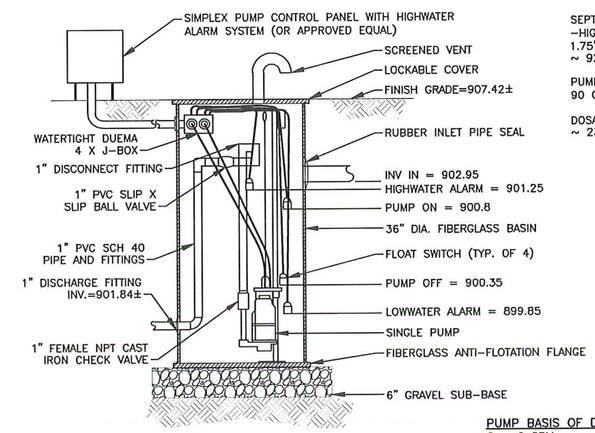

SEPTIC TANK ST115 INV. (903.0) –HIGH WATER ALARM (901.25)= 1.75' OF EMERGENCY STORAGE ~ 92.5 GAL

PUMP STATION RECEIVES 90 GAL/DAY (BLDG 6)

DOSAGE = 0.45' OF VOLUME ~ 23.8 GALLONS

BUILDING 6 SERVICE
EFFLUENT PUMPING UNIT S116

NOT TO SCALE

PUMP BASIS OF DESIGN
Q = 6 GPM
TDH = 29.2 FEET
MYERS MODEL ME3H OR APPROVED EQUAL.
POWER: SINGLE PHASE, 230V, 60HZ

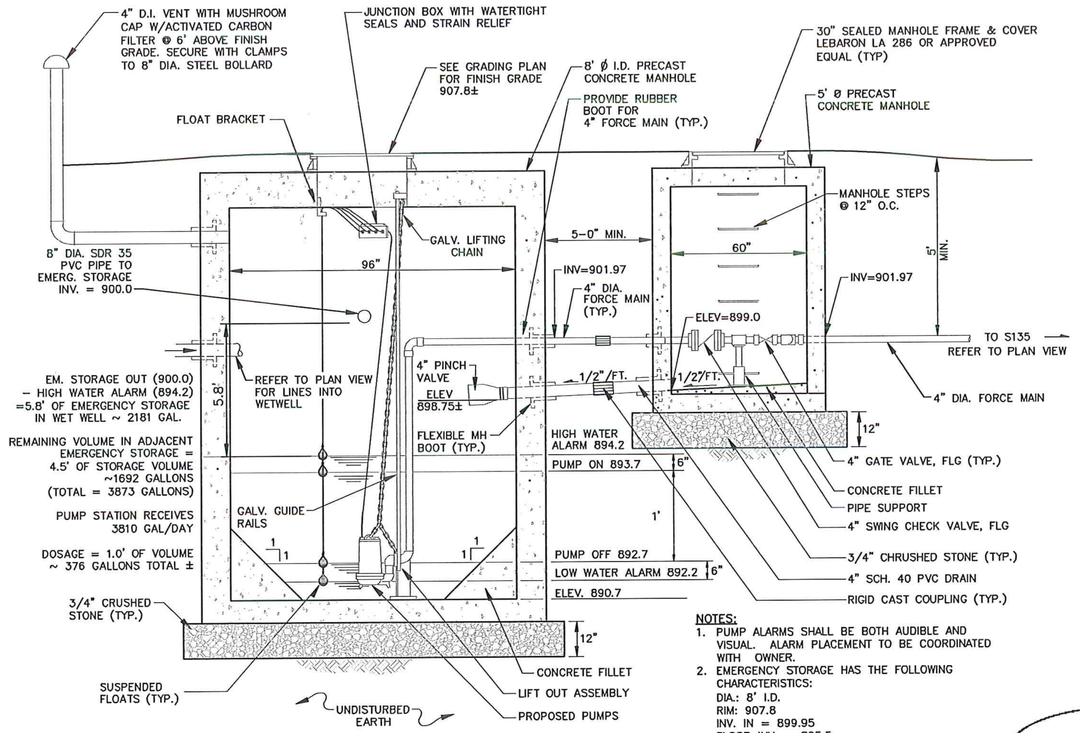

PUMP BASIS OF DESIGN
Q = 80 GPM
TDH = 127 FEET
DUAL ALTERNATING PUMPS
MYERS MODEL WG75HH (GRINDER) OR APPROVED EQUAL.
POWER: 3 PHASE, 230V, 60HZ

NOTES:
1. PUMP ALARMS SHALL BE BOTH AUDIBLE AND VISUAL. ALARM PLACEMENT TO BE COORDINATED WITH OWNER.
2. EMERGENCY STORAGE HAS THE FOLLOWING CHARACTERISTICS:
DIA.: 8' I.D.
RIM: 907.8
INV. IN = 899.95
FLOOR INV. = 895.5

SITE 1 WASTEWATER PUMP STATION S105 & VALVE PIT S134 – SECTION

NOT TO SCALE

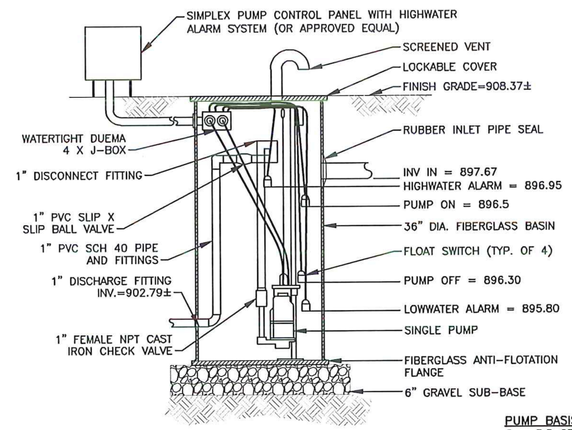

SEPTIC TANK ST122 INV. (897.72) – HIGH WATER ALARM (896.95) = 0.77' OF EMERGENCY STORAGE ~ 40.7 GAL

PUMP STATION RECEIVES 40.5 GAL/DAY (BLDG 3,4,&5)

DOSAGE = 0.20' OF VOLUME ~ 10.6 GALLONS

BUILDING 3,4,&5 SERVICE
EFFLUENT PUMPING UNIT S123

NOT TO SCALE

PUMP BASIS OF DESIGN
Q = 5.5 GPM
TDH = 19.9 FEET
MYERS MODEL SSM33I OR APPROVED EQUAL.
POWER: SINGLE PHASE, 115V, 60HZ

PERMIT PLANS

REV	DATE	DESCRIPTION	BY
5	5/3/15	COLD WEATHER MODIFICATIONS	BMB
4	4/29/15	PERMITTING MODIFICATIONS	SKI
3	1/30/15	WW SYSTEM MODIFICATIONS	BMB
2	8/5/14	ANR COMMENTS	TCB
1	4/18/14	ADD 400-SERIES TEST PITS	CH

IT IS A VIOLATION OF LAW FOR ANY PERSON, UNLESS THEY ARE ACTING UNDER THE DIRECT DIRECTION OF A LICENSED PROFESSIONAL ENGINEER, ARCHITECT, LANDSCAPE ARCHITECT, OR LAND SURVEYOR, TO ALTER AN ITEM IN ANY WAY. IF AN ITEM BEARING THE STAMP OF A LICENSED PROFESSIONAL IS ALTER, THE ALTERING ENGINEER, ARCHITECT, LANDSCAPE ARCHITECT, OR LAND SURVEYOR SHALL STAMP THE DOCUMENT AND INCLUDE THE NOTATION "ALTERED BY" FOLLOWED BY THEIR SIGNATURE, THE DATE OF SUCH ALTERATION, AND A SPECIFIC DESCRIPTION OF THE ALTERATION.

VTrans Working to Get You There Vermont Agency of Transportation

STATE OF VERMONT TIMOTHY C. BRADSHAW NO. 9852 CIVIL LICENSED PROFESSIONAL ENGINEER

McFarland Johnson
53 REGIONAL DRIVE
CONCORD, NH 03301

NEWPORT STATE AIRPORT
COVENTRY, VERMONT
NEWPORT WASTEWATER

SANITARY SEWER DETAILS

SCALE: N.T.S.	DESIGN: TCB	SD-01
DRAWN: MTF	PROJECT: 17958.01	
CHECKED: BLS	DATE: JUNE, 2014	31 OF 36