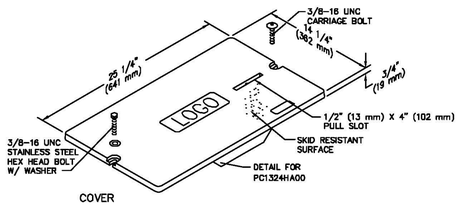

COVER

COVERS (W/ LOGO SEE OPTION 1 ABOVE.)

DESCRIPTION	PART NO.	WEIGHT
W/ 2 Bolts	PC1324CA00	23# (10.4 kg)
W/ No Bolts	PC1324WA00	23# (10.4 kg)
* Heavy Duty W/ 2 Bolts	PC1324HA00	30# (13.6 kg)

BOXES (Stackable)

DESCRIPTION	PART NO.	WEIGHT	DIMENSIONS A	DIMENSIONS B	DIMENSIONS C
W/ No Base	PC1324BA12	52# (23.6 kg)	12" (305 mm)	11 1/4" (286 mm)	N/A
W/ No Base	PC1324BK12	47# (21.3 kg)	12" (305 mm)	11 1/4" (286 mm)	N/A
W/ No Base, (2) Mouseholes	PC1324BB12	49# (22.2 kg)	12" (305 mm)	11 1/4" (286 mm)	N/A
* W/ Base	PC1324DA12	64# (29.0 kg)	12 1/2" (318 mm)	11 3/4" (298 mm)	N/A
Footed Box	PC1324JA12	59# (26.8 kg)	12 1/2" (318 mm)	11 3/4" (298 mm)	2 7/8" (73 mm)

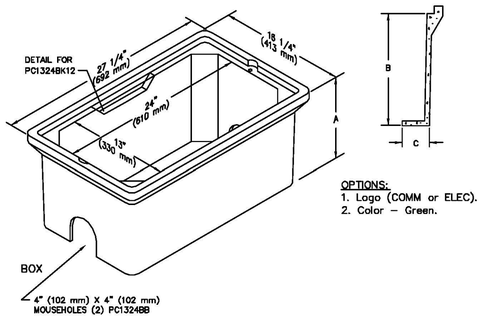

OPTIONS:
1. Logo (COMM or ELEC).
2. Color – Green.

TYPICAL HAND HOLE (PHH/CHH) DETAIL
NOTE TO SCALE

NOTE:

1. 13"W X 24"L (INSIDE DIMENSIONS MINIMUM) W/ OPEN BOTTOM "PC" STYLE QUAZITE HANDHOLE ASSEMBLY OR APPROVED EQUAL. REFER TO PLANS FOR QUANTITIES OF HANDHOLES DENOTED W/ CHH (COMM) OR PHH (POWER).

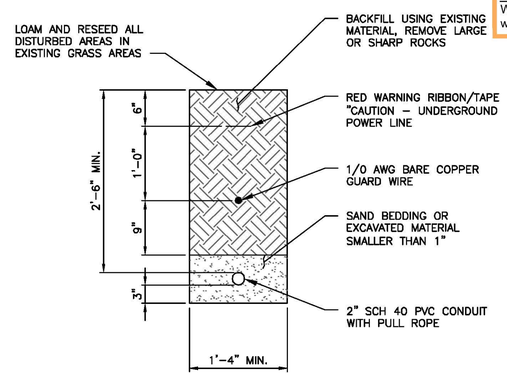

TYPICAL TRENCH DETAIL
NOTE TO SCALE

Record Drawings
Work completed in general conformance with change order 3 contract plan.

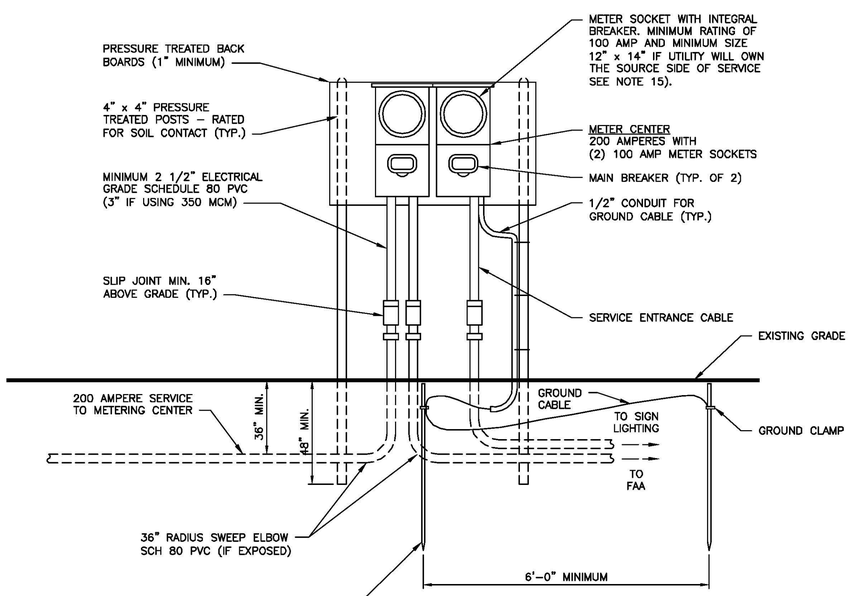

TYPICAL METER PEDESTAL DETAIL
NOTE TO SCALE

NOTES:

1. FOR REFERENCED NOTES IN ABOVE DETAIL, REFER TO TYPICAL METER PEDESTAL NOTES ON DRAWING TITLED "VASI – RUNWAY 19 – MISCELLANEOUS DETAILS – SHEET 2 OF 2" DATED 5/20/2013.
2. ONE METER FOR FAA, THE OTHER METER FOR AIRPORT SIGN CIRCUIT.

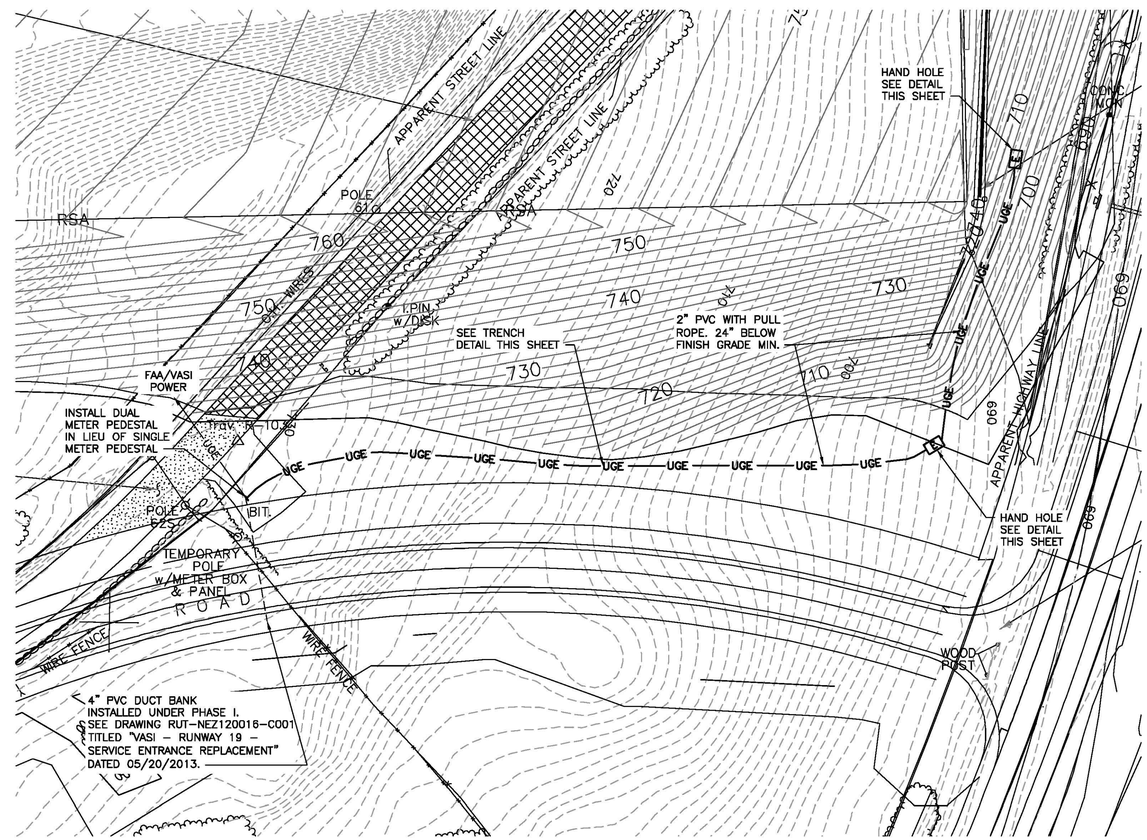

GRAPHIC SCALE
40 0 20 40 80 160
(IN FEET)
1 inch = 40 ft. AT 22X34
HALF SIZE AT 11X17

DuBois & King inc.
ENGINEERING • PLANNING • MANAGEMENT • DEVELOPMENT
6 GREEN TREE DRIVE
SO. BURLINGTON, VT 05403
TEL: (802) 878-7661
FAX: (866) 783-7101
www.dubois-king.com
RANDOLPH, VT
SPRINGFIELD, VT
BEDFORD, NH
LACONIA, NH

© Copyright 2014 Dubois & King Inc

PROFESSIONAL SEAL

NO.	DATE	DESCRIPTION	BY	CK'D

CLARENDON, VERMONT

RUTLAND SOUTHER VERMONT REGIONA AIRPORT

SHEET TITLE
AIRPORT SIGN & ELECTRIC CONDUIT PLAN AND DETAILS

DRAWN BY	DATE
TJD	SEPT. 201
CHECKED BY	D&K PROJECT #
LDC	322274F
PROJ. ENG.	D&K ARCHIVE #
LDC	

SHEET NUMBER
C-1

PROJECT RECORD DRAWINGS