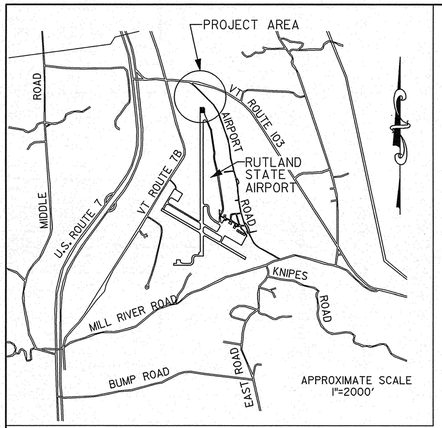

VICINITY MAP

STATE OF VERMONT
AGENCY OF TRANSPORTATION

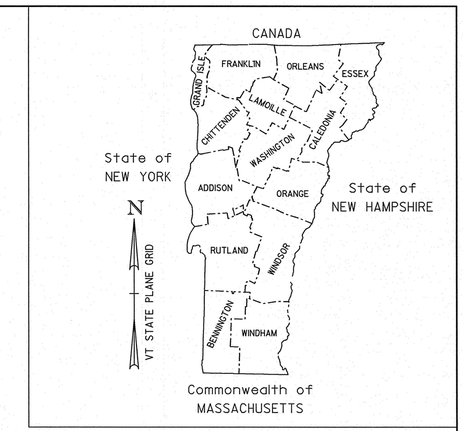

PROPOSED IMPROVEMENT
TOWN OF CLARENDON
COUNTY OF RUTLAND
RUTLAND SOUTHERN VERMONT REGIONAL AIRPORT

RUNWAY 19 SAFETY AREA IMPROVEMENTS, PHASE II
TO INCLUDE WIDEN AND EXTEND
RUNWAY 19 SAFETY AREA (400' X 600')

Record Drawings
Prepared by DuBois & King as VTrans project resident engineer. Contract drawings have been noted to identify general project modifications and/or the completion of work in general conformance with contract plans.

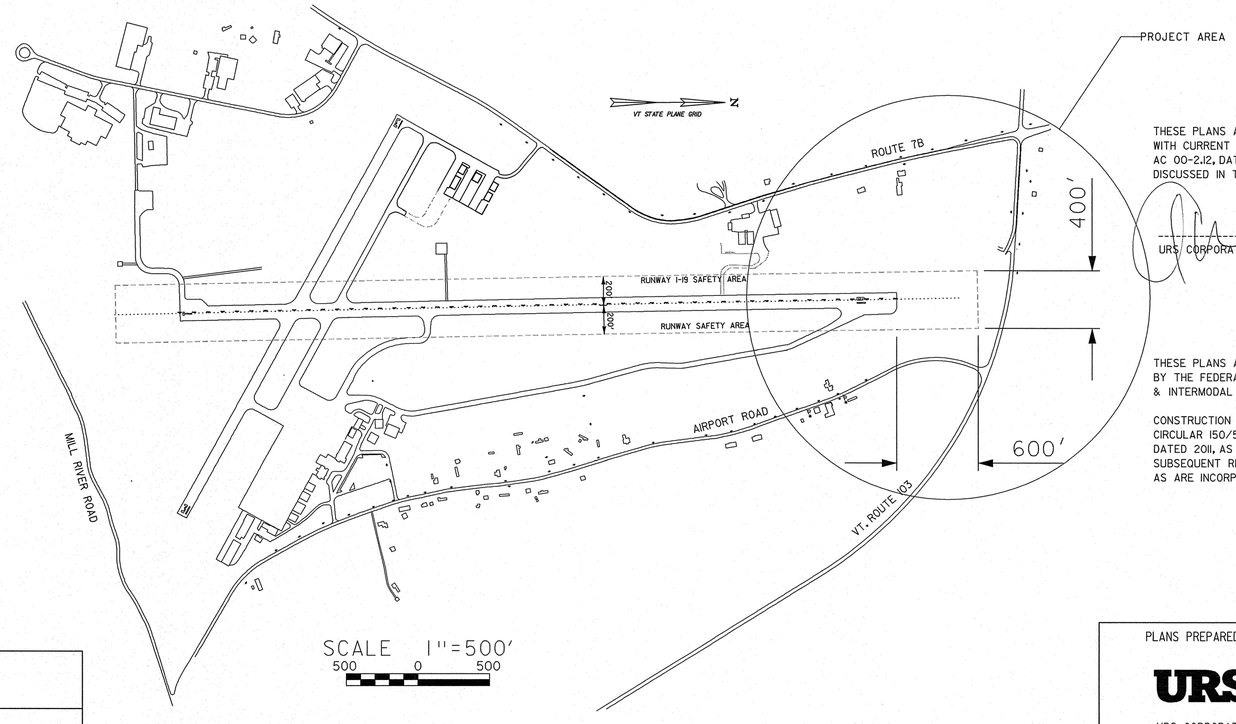

DESIGN CERTIFICATION

THESE PLANS AND SPECIFICATIONS HAVE BEEN PREPARED IN ACCORDANCE WITH CURRENT FAA STANDARDS IDENTIFIED IN ADVISORY CIRCULAR CHECKLIST, AC 00-2.12, DATED JANUARY 25, 2012. DEVIATIONS FROM FAA STANDARDS ARE DISCUSSED IN THE ENGINEER'S REPORT, DATED FEBRUARY, 2013.

URS CORPORATION — DATE 5-31-13

STANDARD NOTE

THESE PLANS ARE SUBJECT TO SUCH ENGINEERING CHANGES AS MAY BE REQUIRED BY THE FEDERAL AVIATION ADMINISTRATION OR THE DIRECTOR OF POLICY, PLANNING & INTERMODAL DEVELOPMENT.

CONSTRUCTION IS TO CARRIED ON IN ACCORDANCE WITH THESE PLANS, FAA ADVISORY CIRCULAR 150/5370-10F, AND THE STANDARD SPECIFICATIONS FOR CONSTRUCTION, DATED 2011, AS APPROVED BY THE FEDERAL HIGHWAY ADMINISTRATION INCLUDING ALL SUBSEQUENT REVISIONS AND SUCH REVISED SPECIFICATIONS AND SPECIAL PROVISIONS AS ARE INCORPORATED IN THESE PLANS.

CONVENTIONAL SYMBOLS

COUNTY LINE	COUNTY LINE
TOWN LINE	TOWN LINE
LIMITS OF ACCESS	
POINT OF ACCESS	X
FENCE LINE	
STONE WALL	
TRAVELED WAY	
GUARD RAIL	
RAILROAD	
SURVEY LINE	
CULVERT	
POWER POLE	
TELEPHONE POLE	
TREES	
CONTROL OF ACCESS	
PROPERTY LINE	
R.O.W. TAKING LINE	
SLOPE RIGHTS	SR SR SR
TOP OF CUT	
TOE OF SLOPE	

STATE OF VERMONT — GERALD M. D'AMICO — No. 3873 — REGISTERED PROFESSIONAL ENGINEER

SURVEYED BY :
SURVEYED DATE :

DATUM
VERTICAL NGVD 88
HORIZONTAL NAD 83

URS PROJECT NO.
38397234

PLANS PREPARED BY:
URS
URS CORPORATION
3 CORPORATE DRIVE, SUITE 203
CLIFTON PARK, NY 12065
PH# (518) 688-0015

DEPARTMENT OF TRANSPORTATION
FEDERAL AVIATION ADMINISTRATOR
APPROVED _____ DATE _____

DIRECTOR, POLICY PLANNING, AND INTERMODAL DEVELOPMENT
APPROVED _____ DATE _____

PROJECT MANAGER : SCOTT FORTNEY

PROJECT NAME : RUTLAND SOUTHERN VERMONT REGIONAL AIRPORT-CLARENDON, VERMONT
PROJECT NUMBER : AV114-8018-300
SHEET 1 OF 36

PROJECT RECORD DRAWINGS

STATE OF VERMONT
AGENCY OF TRANSPORTATION

INDEX OF SHEETS

INDEX OF SHEETS

1	TITLE SHEET
2	INDEX OF SHEETS
3	QUANTITY SHEET
4	DRAINAGE SHEET
5	GENERAL PROJECT LAYOUT
6	TYPICAL SECTIONS - RUNWAY SAFETY AREA
7	RUNWAY SAFETY AREA PROFILE
8	CONSTRUCTION SAFETY & PHASING PLAN - PHASE 2A
9	CONSTRUCTION SAFETY & PHASING PLAN - PHASE 2B
10	CONSTRUCTION SAFETY & PHASING PLAN - PHASE 2C
11	SAFETY PHASING PLAN, NOTES & DETAILS (1)
12	SAFETY PHASING PLAN, NOTES & DETAILS (2)
13	GEOMETRY PLAN
14	RUNWAY SAFETY AREA - GRADING PLAN
15	DRAINAGE PLAN
16	RUNWAY SAFETY AREA-DRAINAGE PROFILES
17	RUNWAY MARKING PLAN
18	RUNWAY MARKING PLAN DETAILS
19	REINFORCED SOIL SLOPE (RSS) PLAN, TYPICAL SECTIONS & DETAILS
20	REINFORCED SOIL SLOPE (RSS) NOTES
21	SEGMENTAL RETAINING WALL AND REINFORCED PAD NOTES
22	SEGMENTAL RETAINING WALL AND REINFORCED PAD PLAN
23	SEGMENTAL RETAINING WALL DEVELOPED ELEVATION 1
24	SEGMENTAL RETAINING WALL DEVELOPED ELEVATION 2
25	SEGMENTAL RETAINING WALL AND CONCRETE BUTTRESS DETAILS
26	BORING AND TEST PIT LOGS
27	TEMPORARY PAPI INSTALLATION DETAILS
28	TEMPORARY PAPI PLAN
29	RETAINING WALL DETAILS
30-36	RSA CROSS SECTIONS

INDEX OF EROSION CONTROL SHEETS

EC-1	EXISTING CONDITIONS PLAN-RUNWAY SAFETY AREA
~~EC-2~~	~~EXISTING CONDITIONS PLAN-BORROW AREA~~ NIC
EC-3	SOIL CLASSIFICATIONS-RUNWAY SAFETY AREA
~~EC-4~~	~~SOIL CLASSIFICATIONS-BORROW AREA~~ NIC
EC-5	EROSION PROTECTION & SEDIMENT CONTROL-PHASE 1
EC-6	EROSION PROTECTION & SEDIMENT CONTROL-PHASE 2A
EC-7	EROSION PROTECTION & SEDIMENT CONTROL-PHASE 2B
EC-8	EROSION PROTECTION & SEDIMENT CONTROL-PHASE 2C
~~EC-9~~	~~EROSION PROTECTION & SEDIMENT CONTROL-BORROW AREA~~ NIC
EC-10	SOIL EROSION & SEDIMENT CONTROL PLAN-DETAIL
EC-11	EROSION PROTECTION & SEDIMENT CONTROL DETAILS (2)
EC-12	EROSION PROTECTION & SEDIMENT CONTROL DETAILS (3)
EC-13	EROSION CONTROL NARRATIVE-RUNWAY SAFETY AREA
~~EC-14~~	~~EROSION CONTROL NARRATIVE BORROW AREA~~ NIC
WM-1	AIRPORT WETLAND MAP
WM-2	PROJECT WETLAND IMPACT

FAA PROVIDED DRAWINGS

RUT-NEZI20015-G001	MALSR RWY 19	COVER SHEET
RUT-NEZI20015-G002	MALSR RWY 19	INDEX SHEET
RUT-NEZI20015-G003	MALSR RWY 19	GENERAL NOTES
RUT-NEZI20015-C001	MALSR RWY 19	FACILITY SITE PLAN
RUT-NEZI20015-C002	MALSR RWY 19	MISC. DETAILS
RUT-NEZI20015-C003	MALSR RWY 19	GRAVEL ACCESS ROAD
RUT-NEZI20015-S001	MALSR RWY 19	FOUNDATION DESIGN LIR STRUCTURE STA. 2+00 AND 3+80
RUT-NEZI20015-S002	MALSR RWY 19	FOUNDATION DESIGN LIR STRUCTURE STA. 5+70
RUT-NEZI20015-Q001	MALSR RWY 19	EQUIPMENT INSTALLATION STA. 2+00 AND 3+80
RUT-NEZI20015-Q002	MALSR RWY 19	EQUIPMENT INSTALLATION STA. 5+70
RUT-NEZI20015-Q003	MALSR RWY 19	LOW IMPACT RESISTANT (LIR) STRUCTURE ASSEMBLY AND MOUNTING DETAILS
RUT-NEZI20015-E001	MALSR RWY 19	ELECTRICAL DETAILS
RUT-NEZI20016-C001	VASI RUNWAY 19	SERVICE ENTRANCE REPLACEMENT
RUT-NEZI20016-C002	VASI RUNWAY 19	MISCELLANEOUS DETAILS SHEET 1 OF 2
RUT-NEZI20016-C003	VASI RUNWAY 19	MISCELLANEOUS DETAILS SHEET 2 OF 2

VAOT STANDARD DRAWINGS

A-61	STANDARD TYPICAL FOR SLOPES IN SOLID ROCK EXCAVATION DRILLING AND BLASTING OF SOLID ROCK SUBGRADE
B-5	EMBANKMENT ON EARTH SLOPE
B-11	METHODS OF SLOPE STABILIZATION
D-3	TREATED GUTTERS
D-4	CORRUGATED PIPE END SECTION
D-6	REINFORCED CONCRETE DROP INLET WITH GRATE FOR USE IN DITCHES
D-15	PRECAST REINFORCED CONCRETE MANHOLE W/CAST IRON COVER
E-100	CONSTRUCTION APPROACH SIGNS
E-107A	DELINEATION, BARRICADES AND DETOURS FOR CONSTRUCTION AREAS
E-164	SQUARE STEEL SIGN POST
F-2	CHAIN LINK FENCE, DRIVE GATE, WALK GATE (TYPE I)

STATE OF VERMONT
DONALD M. D'AMICO
No. 3873
REGISTERED
PROFESSIONAL ENGINEER

AIP 3-50-0015-34

VERMONT AGENCY OF TRANSPORTATION

URS
URS CORPORATION
3 CORPORATE DRIVE, SUITE 203
CLIFTON PARK, NY 12065
(518) 688-0015

PROJECT NAME: RUTLAND SOUTHERN VERMONT REGIONAL AIRPORT
CLARENDON, VERMONT
PROJECT NUMBER: AV14-8018-300

FILE NAME: z07hl24index.dgn
PROJECT LEADER: F. WALSH
DESIGNED BY: M. WASSON
INDEX SHEET
PLOT DATE: 6/2/2013
DRAWN BY: M. WASSON
CHECKED BY:
SHEET 2 OF 36

PROJECT RECORD DRAWINGS

6/2/2013
P:\CADD\Consultants\z07hl24index.dgn

QUANTITY SHEET

DESCRIPTIONS			
ITEM NUMBER	UNIT	ITEMS	PHASE II RUNWAY SAFETY AREA
203.31	CY	SAND BORROW	30,000
601.996	LF	CLEANING CULVERT PIPE, IN-PLACE (GREATER THAN 24")	440
608.25	HOUR	ALL PURPOSE EXCAVATOR RENTAL, TYPE I	100
609.10	MGAL	DUST CONTROL WITH WATER	3,000
613.10	CY	STONE FILL, TYPE I	30
620.12	LF	CHAIN LINK FENCE (6')	400
620.16	LF	GATE FOR CHAIN-LINK FENCE (6')	16
620.17	LF	GATE FOR CHAIN-LINK FENCE (8')	20
620.21	EA	BRACING ASSEMBLY FOR CHAIN LINK FENCE (6')	8
620.50	LF	REMOVING AND RESETTING FENCE	400
630.15	HOUR	FLAGGERS	1,440
~~631.10~~	~~LS~~	~~FIELD OFFICE, ENGINEERS~~	~~1~~ NIC
~~631.26~~	~~DL~~	~~FIELD OFFICE TELEPHONE~~	~~4,000~~ NIC
635.11	LS	MOBILIZATION/DEMOBILIZATION	1
649.11	SY	GEOTEXTILE FOR ROADBED SEPARATOR	150
649.31	SY	GEOTEXTILE UNDER STONE FILL	1,300
649.51	SY	GEOTEXTILE FOR SILT FENCE	500
651.15	LB	SEED	1,200
651.18	LB	FERTILIZER	8,000
651.20	TON	AGRICULTURAL LIMESTONE	25
651.25	TON	HAY MULCH	38
651.35	CY	TOPSOIL	4,800
653.20	SY	TEMPORARY EROSION MATTING	33,500
653.21	SY	PERMANENT EROSION MATTING	24,000
653.35	CY	VEHICLE TRACKING PAD	800
653.55	LF	PROJECT DEMARCATION FENCE	8,200
653.60	LF	EROSION LOG	200
D-701-5.1.1	LF	12" DIA. CPEP	60
D-701-5.1.2	LF	18" DIA. CPEP	1,260
D-701-5.1.3	EA	18" DIA. CPEPES	2
D-701-5.1.4	LF	36" DIA. CPEP(SL)	16
D-701-5.1.5	LF	24" DIA. CPEP	2
D-701-5.1.6	LF	30" DIA. CPEP	55
D-701-5.2	CY	CONCRETE FOR PIPE CRADLES	5
D-701-5.3	CY	ROCK EXCAVATION	50
D-751-5.1	EA	PRECAST REINFORCED CONCRETE MANHOLE	6
D-751-5.3	EA	PRECAST REINFORCED CONCRETE DROP INLET	7
G-152-4.1	SY	GEOGRID REINFORCEMENT	11,000
L-125-5.1	LS	MODIFICATIONS TO MALSR & VASI	1
L-125-5.2	LS	INSTALLATION OF TEMPORARY PAPI SYSTEM	1
L-150-5.1	EA	TEMPORARY RUNWAY THRESHOLD LIGHTING	1
M-1-14.1	LS	REMOBILIZATION	1
M-10-5.1	LS	TEMPORARY CONSTRUCTION ITEMS	1
P-151-4.3	ACRE	CLEARING AND GRUBBING	1
P-152-4.1	CY	UNCLASSIFIED EXCAVATION	9,000
P-152-4.2	CY	EMBANKMENT IN PLACE	220,000
P-152-4.3	SF	SEGMENTAL RETAINING WALL	7,000
P-156-5.1	SY	TEMPORARY SEEDING AND MULCHING	33,500
P-156-5.3	CY	TEMPORARY BENCHES, DIKES, DAMS, & SEDIMENT BASINS	6,200
P-620-5.1	SF	TEMPORARY AIRFIELD PAVEMENT MARKINGS	18,500
P-620-5.2	SF	PERMANENT AIRFIELD PAVEMENT MARKINGS	21,600
P-620-5.3	SF	REMOVAL OF AIRFIELD PAVEMENT MARKINGS	39,600

Record Drawing
Final project quantities are as shown on final pay requisition

STATE OF VERMONT
GERALD W. D'AMICO
No. 3673
REGISTERED PROFESSIONAL ENGINEER

1 6/11/13 ADDENDUM 1

AIP 3-50-0015-34

VERMONT AGENCY OF TRANSPORTATION

URS
URS CORPORATION
3 CORPORATE DRIVE, SUITE 203
CLIFTON PARK, NY 12065
(518) 688-0015

PROJECT NAME: RUTLAND SOUTHERN VERMONT REGIONAL AIRPORT
CLARENDON, VERMONT
PROJECT NUMBER: AV14-8018-300

FILE NAME: z07h124qs.dgn
PROJECT LEADER: F. WALSH
DESIGNED BY: G. D'AMICO
QUANTITY SHEET
PLOT DATE: 6/11/13
DRAWN BY:
CHECKED BY:
SHEET 3 OF 36

6/12/2013
P:\CADD\Consultants\z07h124qs.dgn

PROJECT RECORD DRAWINGS

QUANTITY SHEET

DESCRIPTIONS

ITEM NUMBER	UNIT	ITEMS	PHASE II RUNWAY SAFETY AREA
601.996	LF	CLEANING CULVERT PIPE, IN-PLACE (GREATER THAN 24")	440
608.25	HOUR	ALL PURPOSE EXCAVATOR RENTAL, TYPE I	100
609.10	MGAL	DUST CONTROL WITH WATER	3,000
613.10	CY	STONE FILL, TYPE I	30
620.12	LF	CHAIN LINK FENCE (6')	400
620.16	EA	GATE FOR CHAIN-LINK FENCE (6')	16
620.17	LF	GATE FOR CHAIN-LINK FENCE (8')	20
620.21	EA	BRACING ASSEMBLY FOR CHAIN LINK FENCE (6')	8
620.50	LF	REMOVING AND RESETTING FENCE	400
630.15	HOUR	FLAGGERS	1,440
631.10	LS	FIELD OFFICE, ENGINEERS	1
631.26	DL	FIELD OFFICE TELEPHONE	4,000
635.11	LS	MOBILIZATION/DEMOBILIZATION	1
649.11	SY	GEOTEXTILE FOR ROADBED SEPARATOR	150
649.31	SY	GEOTEXTILE UNDER STONE FILL	1,300
649.51	SY	GEOTEXTILE FOR SILT FENCE	500
651.15	LB	SEED	1,200
651.18	LB	FERTILIZER	8,000
651.20	TON	AGRICULTURAL LIMESTONE	25
651.25	TON	HAY MULCH	38
651.35	CY	TOPSOIL	4,800
653.20	SY	TEMPORARY EROSION MATTING	33,500
653.21	SY	PERMANENT EROSION MATTING	24,000
653.35	CY	VEHICLE TRACKING PAD	800
653.55	LF	PROJECT DEMARCATION FENCE	8,200
653.60	LF	EROSION LOG	200
D-701-5.1.1	LF	12" DIA. CPEP	60
D-701-5.1.2	LF	18" DIA. CPEP	1,260
D-701-5.1.3	EA	18" DIA. CPEPES	2
D-701-5.1.4	LF	36" DIA. CPEP(SL)	16
D-701-5.1.5	LF	24" DIA. CPEP	2
D-701-5.1.6	LF	30" DIA. CPEP	55
D-701-5.2	CY	CONCRETE FOR PIPE CRADLES	5
D-701-5.3	CY	ROCK EXCAVATION	50
D-751-5.1	EA	PRECAST REINFORCED CONCRETE MANHOLE	6
D-751-5.3	EA	PRECAST REINFORCED CONCRETE DROP INLET	7
G-152-4.1	SY	GEOGRID REINFORCEMENT	11,000
L-125-5.1	LS	MODIFICATIONS TO MALSR & VASI	1
L-125-5.2	LS	INSTALLATION OF TEMPORARY PAPI SYSTEM	1
L-150-5.1	EA	TEMPORARY RUNWAY THRESHOLD LIGHTING	1
M-1-14.1	LS	REMOBILIZATION	1
M-10-5.1	LS	TEMPORARY CONSTRUCTION ITEMS	1
P-151-4.3	ACRE	CLEARING AND GRUBBING	1
P-152-4.1	CY	UNCLASSIFIED EXCAVATION	9,000
P-152-4.2	CY	EMBANKMENT IN PLACE	250,000
P-152-4.3	SF	SEGMENTAL RETAINING WALL	7,000
P-156-5.1	SY	TEMPORARY SEEDING AND MULCHING	33,500
P-156-5.3	CY	TEMPORARY BENCHES, DIKES, DAMS, & SEDIMENT BASINS	6,200
P-620-5.1	SF	TEMPORARY AIRFIELD PAVEMENT MARKINGS	18,500
P-620-5.2	SF	PERMANENT AIRFIELD PAVEMENT MARKINGS	21,600
P-620-5.3	SF	REMOVAL OF AIRFIELD PAVEMENT MARKINGS	39,600

STATE OF VERMONT
BRIAN D. D'AMICO
No. 3873
REGISTERED
PROFESSIONAL ENGINEER

AIP 3-50-0015-34

VERMONT AGENCY OF TRANSPORTATION

URS
URS CORPORATION
3 CORPORATE DRIVE, SUITE 203
CLIFTON PARK, NY 12065
(518) 688-0015

PROJECT NAME: RUTLAND SOUTHERN VERMONT REGIONAL AIRPORT
CLARENDON, VERMONT
PROJECT NUMBER: AV14-8018-300

FILE NAME: z07h124qs.dgn
PROJECT LEADER: F. WALSH
DESIGNED BY: G. D'AMICO
QUANTITY SHEET

PLOT DATE: 6/2/2013
DRAWN BY:
CHECKED BY:
SHEET 3 OF 36

6/2/2013
P:\CADD\Consultants\z07h124qs.dgn

PROJECT RECORD DRAWINGS

DRAINAGE QUANTITY SHEET

ITEM #	STRUCTURE	LOCATION		QUANTITY	SIZE (IN)	MATERIAL	SLOPE	RIM ELEV.	INV. OUT	INV. IN
D-751-5.3	DI 1	154+35	200' LT	1 EACH				765.08	757.03 (NW)	
D-701-5.1.2				132 LF	18	CPEP	18.26%			
D-751-5.1	MH 1	155+32	282' LT	1 EACH				737.92	732.75 (NW)	732.92 (SE)
D-701-5.1.2				23 LF	18	CPEP	5.00%			
D-701-5.1.3	CPEPES	155+54	301' LT	1 EACH	18				731.60	
613.10	SF TYP 1	155+54	301' LT	7 CY						
D-751-5.3	DI 2	156+67	200' LT	1 EACH				753.96	749.46 (N)	
D-701-5.1.2				175 LF	18	CPEP	4.97%			
D-751-5.3	DI 7	158+45	200' LT	1 EACH				745.22	737.8 (NW)	737.80 (N) 740.78 (S)
D-751-5.3	DI 3	159+02	200' LT	1 EACH				743.06	738.06 (S)	
D-701-5.1.2				52 LF	18	CPEP	0.50%			
D-701-5.1.2				87 LF	18	CPEP	21.28%			
D-751-5.1	MH 4	158+77	272' LT	1 EACH				723.67	715.96 (NW)	719.31 (SE)
D-701-5.1.2				72 LF	18	CPEP	4.12%			
D-701-5.1.3	CPEPES	159+37	320' LT	1 EACH	18				713.00	
613.10	SF TYP 1	159+37	320' LT	7 CY						
D-751-5.3	DI 4	154+35	200' RT	1 EACH				765.40	761.24 (N)	
D-701-5.1.2				228 LF	18	CPEP	4.61%			
D-751-5.3	DI 5	156+68	200' RT	1 EACH				754.87	750.20 (N)	750.70 (S)
D-701-5.1.2				227 LF	18	CPEP	5.33%			
D-751-5.3	DI 6	159+00	200' RT	1 EACH				743.08	730.00 (E)	738.08 (S)
D-701-5.1.2				117 LF	18	CPEP	31.68%			
D-751-5.1	MH 5	158+58	314' RT	1 EACH				697.00	692.33 (N)	692.83 (W)
D-701-5.1.2				57 LF	18	CPEP	9.30%			
D-751-5.1	MH 3	159+15	337' RT	1 EACH				690.16	686.51 (NW)	687.01 (S)
D-701-5.1.2				81 LF	18	CPEP	0.50%			
613.10	SF TYP 1			7 CY						

Record Drawing
Final project quantities are as shown on final pay requisition

TEMPORARY SEDIMENTATION BASIN								
ITEM #	STRUCTURE	QUANTITY	SIZE (IN)	MATERIAL	SLOPE	RIM ELEV.	INV. OUT	INV. IN
D-701-5.1.4	OUTLET STRUCTURE	8 LF	36	CPEP			705.00	
D-701-5.1.1		60 LF	12	CPEP	1.00%			
613.10	SF TYPE 1	4.67 CY					704.40	

OUTLET STRUCTURE FOR ROUTE 103								
ITEM #	STRUCTURE	QUANTITY	SIZE (IN)	MATERIAL	SLOPE	RIM ELEV.	INV. OUT	INV. IN
D-701-5.1.4	TRASH RACK	8 LF	36	CPEP			684.00	688.20
D-701-5.1.5		2 LF	24	CPEP				

AIRPORT ROAD CULVERT EXTENSION								
ITEM #	STRUCTURE	QUANTITY	SIZE (IN)	MATERIAL	SLOPE	RIM ELEV.	INV. OUT	INV. IN
D-751-5.1	MH 6	1 EACH				691.80	684.84	684.84 (W)
D-701-5.1.6		51 LF	30	CPEP	0.86%			
D-751-5.1	MH 7	1 EACH				691.80	684.40 (NE)	684.40 (W)

TOTAL			
ITEM	DESCRIPTION	QUANTITY	UNIT
D-701-5.1.1	12" CPEP	60	LF
D-701-5.1.2	18" CPEP	1251	LF
D-701-5.1.3	18" CPEPES	2	EA
D-701-5.1.4	36" CPEP	16	LF
D-751-5.1	MANHOLE	6	EA
D-751-5.3	DROP INLET	7	EA
D-701-5.1.5	24" CPEP	2	LF
D-701-5.1.6	30" CPEP	51	LF
613.10	STONE FILL, TYPE 1	25.67	CY

STATE OF VERMONT
GERALD D'AMICO
No. 3873
REGISTERED
PROFESSIONAL ENGINEER

AIP 3-50-0015-34

VERMONT AGENCY OF TRANSPORTATION

URS
URS CORPORATION
3 CORPORATE DRIVE, SUITE 203
CLIFTON PARK, NY 12065
(518) 688-0015

PROJECT NAME: RUTLAND SOUTHERN VERMONT REGIONAL AIRPORT
CLARENDON, VERMONT
PROJECT NUMBER: AV14-8018-300

FILE NAME: z07hl24ds.dgn
PROJECT LEADER: F. WALSH
DESIGNED BY: G. D'AMICO
DRAINAGE SHEET
PLOT DATE: 6/2/2013
DRAWN BY: M. KEMP
CHECKED BY:
SHEET 4 OF 36

PROJECT RECORD DRAWINGS

6/2/2013
P:\CADD\Consultants\z07hl24ds.dgn

PROJECT DESCRIPTION

(1) WIDEN & EXTEND RUNWAY SAFETY AREA (400' X 600')
(2) REMOVE AND RE-INSTALL THREE MALS TOWERS AND LIGHTS
(3) INSTALL TEMPORARY PAPI FOR RUNWAY 19

NOTES

1. TRUCK ENTERING SIGNS TO BE PLACED ON ROUTE 103 AND ROUTE 7B APPROXIMATELY 150' AND 75' FROM THE CONTRACTOR'S ENTRANCE ONTO AIRPORT ROAD IN EACH DIRECTION. SIGNS TO BE PLACED AT LEAST 8' OFF THE EDGE OF PAVEMENT.

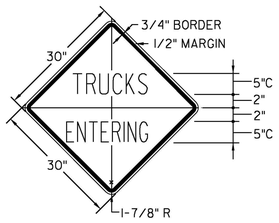

COLORS

TEXT & BORDER - BLACK (NON-REFLECT.)
BACKGROUND - YELLOW (REFLECT.)

E-121 STANDARD SIGN PLACEMENT
E-100 CONSTRUCTION APPROACH SIGNS

TRUCKS ENTERING
WARNING SIGN

BENCHMARK #1	DISK 650M, 1979	374614.055N, 1521821.019E ELEVATION 782.54
BENCHMARK #2	DISK 1105, 1987	378552.173N, 1520976.989E ELEVATION 773.79
BENCHMARK #3	R.R. SPIKE IN PAVEMENT	375740.432N, 1520314.989E ELEVATION 780.22

N

VT STATE PLANE GRID

BM #2
ROUTE 7B
TAXIWAY F
TAXIWAY B-WEST
TAXIWAY G
BM #3
CONTRACTOR'S ACCESS B
INSTALL 2-8' x 10' DRIVE GATES, ITEM 620.17
CONTRACTOR'S EQUIPMENT AND STORAGE AREA (100' x 200)
CHAINLINK FENCE, ITEM 620.12
400' x 6'
TO RUTLAND
ROUTE 7B
VT 103
PLACE 1 / 2" x 12' x 24' STEEL PLATE OVER UNDERGROUND ELECTRIC SERVICE TO GLIDE SLOPE
CONTRACTOR'S ACCESS C
NEW 6' x 16' CHAINLINK GATE ITEM 620.16
HAUL ROUTE
EXISTING AIRPORT ROAD*
TAXIWAY D
EXISTING AWOS EQUIPMENT
200'
200'
400'
600'
RUNWAY SAFETY AREA
BM #1
TAXIWAY B-EAST
TAXIWAY C
LOCALIZER
TAXIWAY E
MODIFY EXISTING FAA APPROACH LIGHT TOWERS
WIDEN AND EXTEND RUNWAY SAFETY AREA
TOWN HIGHWAY 7
EXISTING VAULT
TERMINAL
AIRPORT ROAD
AIRPORT PROPERTY LINE
*EXISTING AIRPORT ROAD TO BE REMOVED UNDER PHASE I-BEFORE CONSTRUCTION OF PHASE II
MILL RIVER ROAD
VT. ROUTE 103
TO LUDLOW

0 300 600
SCALE IN FEET

STATE OF VERMONT
DONALD W. D'AMICO
No. 3873
REGISTERED
PROFESSIONAL ENGINEER

AIP 3-50-0015-34

VERMONT AGENCY OF TRANSPORTATION

URS
URS CORPORATION
3 CORPORATE DRIVE, SUITE 203
CLIFTON PARK, NY 12065
(518) 688-0015

PROJECT NAME: RUTLAND SOUTHERN VERMONT REGIONAL AIRPORT
CLARENDON, VERMONT
PROJECT NUMBER: AV14-8018-300

FILE NAME: z07h124gpl.dgn
PROJECT LEADER: F. WALSH
DESIGNED BY: G. D'AMICO
GENERAL PROJECT LAYOUT

PLOT DATE: 6/2/2013
DRAWN BY: M. KEMP
CHECKED BY:
SHEET 5 OF 36

6/2/2013
P:\CADD\Consultants\z07h124gpl.dgn

PROJECT RECORD DRAWINGS

Record Drawing
Finished grades are shown on Attachment A: Construction Survey Record Plan

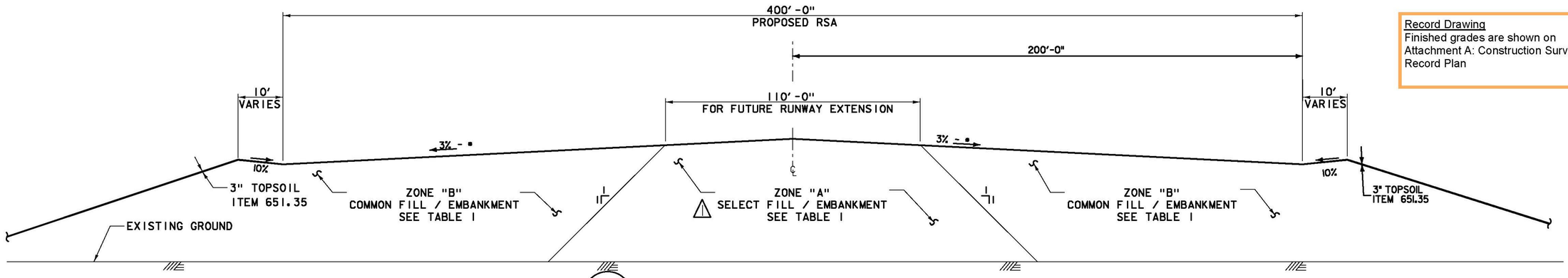

E RUNWAY SAFETY AREA (RSA) - EXTENSION
⚠ STA. 153+05 TO STA. 159+05

* SEE GRADING PLAN AND SECTIONS

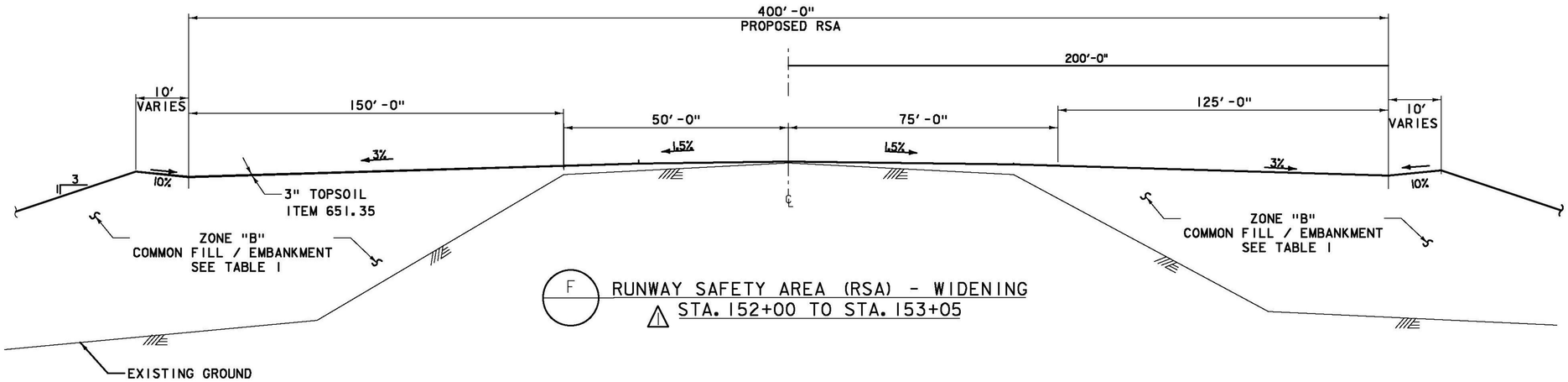

F RUNWAY SAFETY AREA (RSA) - WIDENING
⚠ STA. 152+00 TO STA. 153+05

GENERAL NOTES

1. SEED, ITEM 651.15, SHALL BE APPLIED AS DIRECTED BY ENGINEER. THE SEED MIXTURE SHALL CONFORM TO:

% WT	LBS / A	NAME	PUR %	GERM
20	14	TALL FESCUE (K-31)	95	85
10	7	PERNNIAL RYE GRASS	95	85
1	1	MEDIUM RED CLOVER	95	85
2	2	EMPIRE BIRDS FOOT TREFOIL	98	85
22	15	CLIMAX TIMOTHY	95	85
25	17	CREEPING RED FESCUE	98	85
10	7	ANNUAL RYE	95	85
10	7	ORCHARD GRASS	95	85
100	70			

THE SEED MIXTURE SHALL NOT HAVE A WEED CONTENT EXCEEDING 0.40% BY WEIGHT AND SHALL BE FREE OF ALL NOXIOUS WEED SEED.

2. FERTILIZER, ITEM 651.18 FORMULA 10-20-10 TO BE USED WITH SEED. ITEM 651.18, APPLIED AT THE RATE OF 500 LBS / ACRE.

   AGRICULTURAL LIMESTONE, ITEM 651.20, TO BE APPLIED AT THE RATE OF 2 TONS / ACRE OR AS DIRECTED BY ENGINEER.

   HAY MULCH, ITEM 651.25, SHALL BE PLACED ON EARTH SLOPES AT THE RATE OF 2 TON/ACRE.

   TOPSOIL, ITEM 651.35, TO BE USED WITH SEED. ITEM 651.15, AS DIRECTED BY THE ENGINEER.

3. PERMANENT EROSION CONTROL MATTING, ITEM 653.21, SHALL BE PLACED ON SLOPES OVER 5% WHEN DIRECTED BY THE ENGINEER.

4. ALLOWABLE THICKNESS TOLERANCES:

   SUBGRADE ± ½"
   CONTROLLED MATERIAL ± ½"

5. PAY LIMITS FOR SEED, LIME, FERTILIZER & MULCH ARE EQUAL TO THE APPROVED CONSTRUCTION LIMITS.

⚠ 6. SELECT AND COMMON FILL SHALL CONTAIN NO MORE THAN 30% FINES (BY WEIGHT) BASED ON MATERIAL PASSING THE #200 U.S. STANDARD SIEVE SIZE. SELECT AND COMMON FILL SHALL BE FREE OF ICE, SNOW, ROOTS, SOD, RUBBISH, AND OTHER DELETERIOUS OR ORGANIC MATTER, AND BE SUITABLE FOR MEETING THE COMPACTION REQUIREMENTS FOR EACH DESIGNATED ZONE AS SHOWN ON THE DRAWINGS.

TABLE I

EMBANKMENT FILL ZONE	SUBGRADE PREPARATION	BACKFILL MATERIAL	BACKFILL CRITERIA (SEE NOTE 6)	COMPACTION CRITERIA
ZONE "A"	STRIP TOPSOIL PROOF ROLL EXISTING SOILS EVALUATE	SELECT	8" MAX STONE; 12" MAX LIFT THICKNESS	95% ASTM D1557
ZONE "B"	PROOF ROLL EVALUATE	COMMON	12" MAX STONE; 18" MAX LIFT THICKNESS	90% ASTM D1557

⚠ 6/11/13 ADDENDUM I

STATE OF VERMONT · DONALD B. D'AMICO · No. 3073 · REGISTERED PROFESSIONAL ENGINEER

VERMONT AGENCY OF TRANSPORTATION

URS
URS CORPORATION
3 CORPORATE DRIVE, SUITE 203
CLIFTON PARK, NY 12065
(518) 688-0015

PROJECT NAME: RUTLAND SOUTHERN VERMONT REGIONAL AIRPORT
CLARENDON, VERMONT
PROJECT NUMBER: AV14-8018-300

FILE NAME: z07h124typ_rsa.dgn
PROJECT LEADER: F. WALSH
DESIGNED BY: G. D'AMICO
TYPICAL SECTIONS - RSA
PLOT DATE: 6/11/13
DRAWN BY: M. KEMP
CHECKED BY:
SHEET 6 OF 36

6/12/2013
P:\CADD\Consultants\z07h124typ_rsa.dgn

PROJECT RECORD DRAWINGS

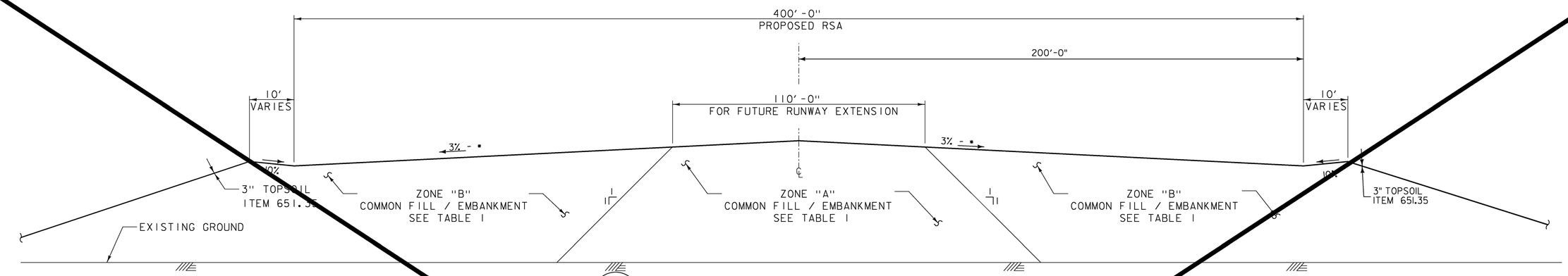

E RUNWAY SAFETY AREA (RSA) - EXTENSION
STA. 155+05 TO STA. 159+05

* SEE GRADING PLAN AND SECTIONS

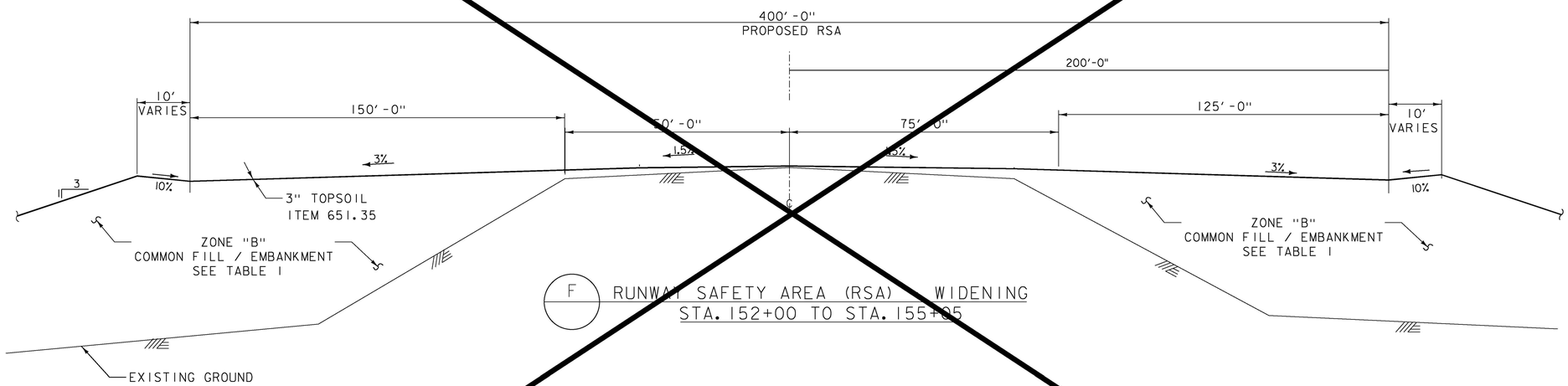

F RUNWAY SAFETY AREA (RSA) - WIDENING
STA. 152+00 TO STA. 155+05

GENERAL NOTES

1. SEED, ITEM 651.15, SHALL BE APPLIED AS DIRECTED BY ENGINEER. THE SEED MIXTURE SHALL CONFORM TO:

% WT	LBS / A	NAME	PUR %	GERM
20	14	TALL FESCUE (K-31)	95	85
10	7	PERNNIAL RYE GRASS	95	85
1	1	MEDIUM RED CLOVER	95	85
2	2	EMPIRE BIRDS FOOT TREFOIL	98	85
22	15	CLIMAX TIMOTHY	95	85
25	17	CREEPING RED FESCUE	98	85
10	7	ANNUAL RYE	95	85
10	7	ORCHARD GRASS	95	85
100	70			

THE SEED MIXTURE SHALL NOT HAVE A WEED CONTENT EXCEEDING 0.40% BY WEIGHT AND SHALL BE FREE OF ALL NOXIOUS WEED SEED.

2. FERTILIZER, ITEM 651.18 FORMULA 10-20-10 TO BE USED WITH SEED. ITEM 651.18, APPLIED AT THE RATE OF 500 LBS / ACRE.

   AGRICULTURAL LIMESTONE, ITEM 651.20, TO BE APPLIED AT THE RATE OF 2 TONS / ACRE OR AS DIRECTED BY ENGINEER.

   HAY MULCH, ITEM 651.25, SHALL BE PLACED ON EARTH SLOPES AT THE RATE OF 2 TON/ACRE.

   TOPSOIL, ITEM 651.35, TO BE USED WITH SEED. ITEM 651.15, AS DIRECTED BY THE ENGINEER.

3. PERMANENT EROSION CONTROL MATTING, ITEM 653.21, SHALL BE PLACED ON SLOPES OVER 5% WHEN DIRECTED BY THE ENGINEER.

4. ALLOWABLE THICKNESS TOLERANCES:

SUBGRADE	± ½"
CONTROLLED MATERIAL	± ½"

5. PAY LIMITS FOR SEED, LIME, FERTILIZER & MULCH ARE EQUAL TO THE APPROVED CONSTRUCTION LIMITS.

TABLE I

EMBANKMENT FILL ZONE	SUBGRADE PREPARATION	BACKFILL MATERIAL	BACKFILL CRITERIA	COMPACTION CRITERIA
ZONE "A"	STRIP TOPSOIL PROOF ROLL EXISTING SOILS EVALUATE	SELECT	8" MAX STONE; 12" MAX LIFT THICKNESS	95% ASTM D1557
ZONE "B"	PROOF ROLL EVALUATE	COMMON	12" MAX STONE; 18" MAX LIFT THICKNESS	90% ASTM D1557

STATE OF VERMONT
HAROLD W. D'AMICO
No. 3873
REGISTERED
PROFESSIONAL ENGINEER

VERMONT AGENCY OF TRANSPORTATION

URS
URS CORPORATION
3 CORPORATE DRIVE, SUITE 203
CLIFTON PARK, NY 12065
(518) 688-0015

PROJECT NAME: RUTLAND SOUTHERN VERMONT REGIONAL AIRPORT
CLARENDON, VERMONT
PROJECT NUMBER: AV14-8018-300

FILE NAME: z07h124typ_rsa.dgn
PROJECT LEADER: F. WALSH
DESIGNED BY: G. D'AMICO
TYPICAL SECTIONS - RSA
PLOT DATE: 6/2/2013
DRAWN BY: M. KEHR
CHECKED BY:
SHEET 6 OF 36

6/2/2013
P:\CADD\Consultants\z07h124typ_rsa.dgn

PROJECT RECORD DRAWINGS

Record Drawing
Finished grades are shown on
Attachment A: Construction Survey
Record Plan

PROPOSED RUNWAY SAFETY AREA EXTENSION

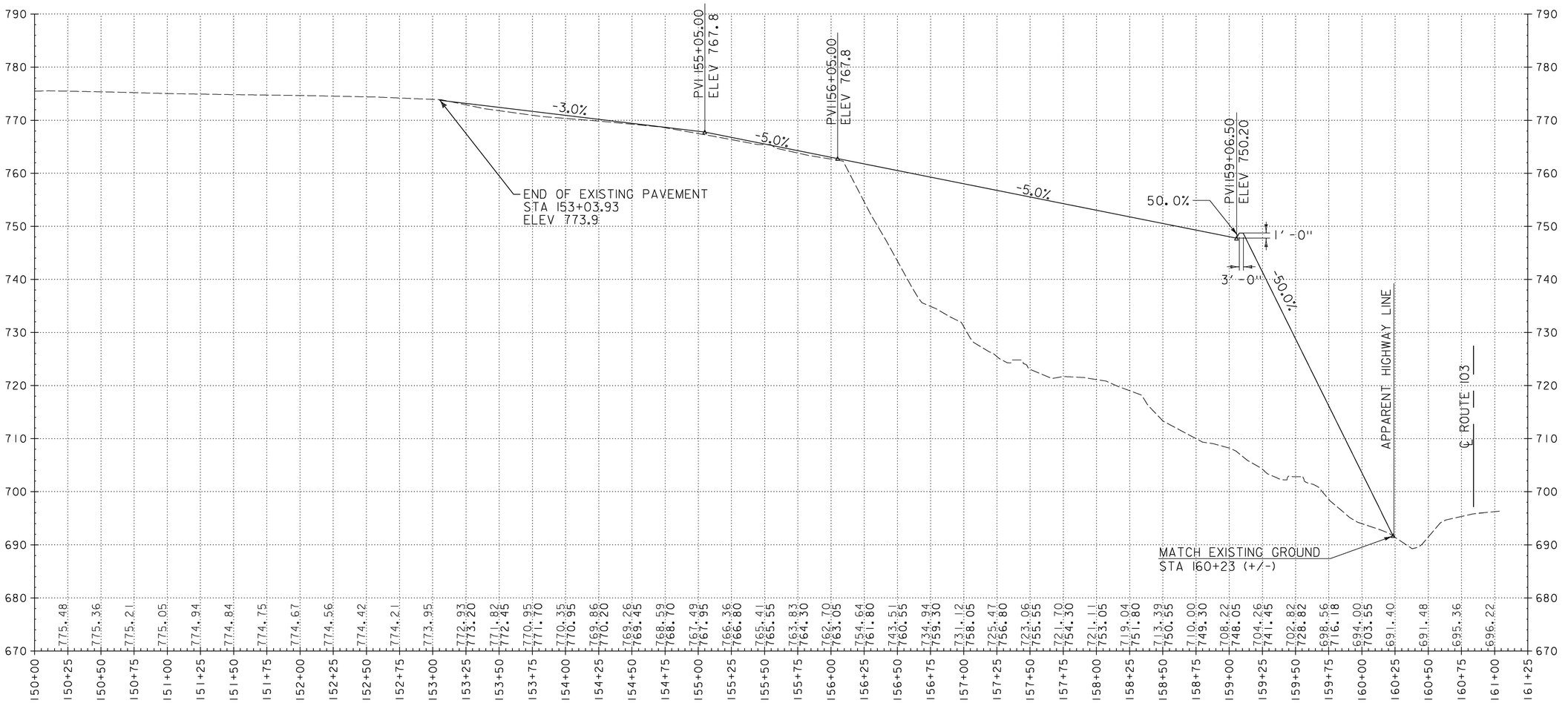

LINE	SURFACE
———	PROPOSED
- - - - -	EXISTING
Scaled 4 Times Ver.	
Scaled 1 Times Hor.	

STATE OF VERMONT
GERALD M. D'AMICO
No. 3873
REGISTERED
PROFESSIONAL ENGINEER

0 40 80
HORIZ SCALE IN FEET

0 4 8
VERT SCALE IN FEET

AIP 3-50-0015-34

VERMONT AGENCY OF TRANSPORTATION

URS
URS CORPORATION
3 CORPORATE DRIVE, SUITE 203
CLIFTON PARK, NY 12065
(518) 688-0015

PROJECT NAME: RUTLAND SOUTHERN VERMONT REGIONAL AIRPORT
CLARENDON, VERMONT
PROJECT NUMBER: AV14-8018-300

FILE NAME: z07hl24pro_rsa.dgn	PLOT DATE: 6/2/2013
PROJECT LEADER: F. WALSH	DRAWN BY: M. KEMP
DESIGNED BY: G. D'AMICO	CHECKED BY:
RUNWAY SAFETY AREA PROFILE	SHEET 7 OF 36

PROJECT RECORD DRAWINGS

6/2/2013
P:\CADD\Consultants\z07hl24pro_rsa.dgn

PHASE 2A RUNWAY 1-19 DECLARED DISTANCES

	TORA		TODA		ASDA		LDA	
RUNWAY	1	19	1	19	1	19	1	19
EXISTING	5000'	5000'	5000'	5000'	5000'	5000'	5000'	5000'
PHASE 2A	5000'	5000'	5000'	5000'	5000'	5000'	5000'	5000'

LEGEND

- EXISTING FENCE
- PROPOSED FENCE
- 755 EXISTING CONTOUR
- PROJECT DEMARCATION FENCE

N

VT STATE PLANE GRID

STATE OF VERMONT · DAVID D. D'AMICO · No. 3873 · REGISTERED PROFESSIONAL ENGINEER

CONSTRUCTION ENTRANCE

VT ROUTE 7B

INSTALL 2 - 8' x 10' DRIVE GATES

VEHICLE TRACKING PAD FOR CONSTRUCTION ACCESS B

CONTRACTOR'S EQUIPMENT AREA B (100' BY 200')

INSTALL 6' CHAINLINK FENCE

INSTALL 16' DRIVE GATE

STOP

PROJECT DEMARCATION FENCE

FLAGGER

RUNWAY SAFETY AREA

VTRANS TRANSPORTATION MAINTENANCE FACILITY

EXISTING ANTENNA TOWER

FLAGGER

PROPOSED HAUL ROUTE

CONSTRUCTION ENTRANCE

VEHICLE TRACKING PAD FOR CONSTRUCTION ACCESS C

STOP

APPROXIMATE LOCATION TEMPORARY TOPSOIL STOCKFILL 75' X 50'

PROPOSED HAUL ROUTE

VT ROUTE 103

REMOVE MALS AND TOWER AT STATION 159+50

APPROXIMATE LIMIT OF EXISTING RSA

REMOVE MALS AND TOWER AT STATION 157+50

CLOSED RUNWAY SEE NOTE

GLIDE SLOPE AREA

RUNWAY 1-19

CLOSED RUNWAY SEE NOTE

LIGHTED LOW PROFILE BARRICADES AT TAXIWAY C & E

TAXIWAY C

TAXIWAY E

NEW AIRPORT ROAD

AIRPORT ROAD AND ROUTE 103 TURNLANE TO BE COMPLETED IN PHASE I

0 120 240

SCALE IN FEET

AIP 3-50-0015-34

PHASING NOTES:

PROJECT CONSTRUCTION PHASE 2A
DURATION: APPROXIMATELY TWO MONTHS

MAJOR WORK ITEMS
PLACE EMBANKMENT TO APPROXIMATE ELEVATION 750 FEET MSL

SPECIFIC REQUIREMENTS
INSTALL CONTRACTOR'S ACCESS GATES AND FENCING AT ACCESS POINTS B AND C

INSTALL TRUCK ENTERING SIGNAGE ON ROUTES 7B AND 103

PLACE PROJECT DEMARCATION FENCING

INSTALL EROSION AND SEDIMENTATION CONTROL MEASURES

REMOVE MALS AND TOWERS AT STATION 157+50 AND 159+50

RUNWAY 1-19 WILL HAVE TO BE CLOSED WHEN REMOVING MALS TOWERS; RUNWAY CLOSURE WILL REQUIRE PLACING LIGHTED X'S OVER THE RUNWAY NUMERALS; THIS WORK WILL BE CONDUCTED BETWEEN 9:00 PM AND 6:00 AM. CONTRACTOR TO PROVIDE 72 HOURS NOTICE BEFORE CLOSING RUNWAY TO ALLOW FOR ISSUANCE OF NOTAM.

REMOVE EXISTING AIRPORT FENCE.

HAUL AND PLACE EMBANKMENT UP TO ELEVATION 750 FEET MSL; CONTRACTOR TO PROVIDE AND MAINTAIN GATE GUARDS AT ALL CONTRACTOR ACCESS POINTS TO CONTROL (LIMIT) ACCESS ONTO AIRFIELD

CONTRACTOR TO PROVIDE FLAGGER ON HAUL ROUTE AT VTRANS MAINTENANCE DRIVEWAY FOR TRAFFIC CONTROL

AIRFIELD IMPACTS
GLIDE SLOPE WILL BE SHUT DOWN AND "NOTAM-ED" OUT OF SERVICE. FROM DAY 1 MALSR WILL BE SHUT DOWN AFTER MALS AT STATIONS 157+50 AND 159+50 ARE REMOVED.

RUNWAY CLOSURE REQUIRED ONE NIGHT BETWEEN 9:00 PM AND 6:00 AM FOR MALSR TOWER REMOVAL.

GENERAL NOTES:

1. LIGHTED X'S TO BE IN PLACE ON RUNWAY DURING RUNWAY CLOSURE 9:00 PM TO 6:00 AM. RUNWAY 1-19 AND TAXIWAY "E" LIGHTS OFF.
2. LOW PROFILE BARRICADES TO BE PLACED ON TAXIWAY "E" AND "C" TO CLOSE TAXIWAY WHEN RUNWAY IS CLOSED, AND ON RUNWAY 1-19 NORTH OF TAXIWAY "B" AND 75' SOUTH OF RUNWAY 13-31 INTERSECTION.
3. CONSTRUCTION LIMITS TO BE MARKED USING PROJECT DEMARCATION FENCE.

VERMONT AGENCY OF TRANSPORTATION

URS
URS CORPORATION
3 CORPORATE DRIVE, SUITE 203
CLIFTON PARK, NY 12065
(518) 688-0015

PROJECT NAME: RUTLAND SOUTHERN VERMONT REGIONAL AIRPORT
CLARENDON, VERMONT
PROJECT NUMBER: AV14-8018-300

FILE NAME: z07h124cspp-2A.dgn
PROJECT LEADER: F. WALSH
DESIGNED BY: G. D'AMICO
CONST. SAFETY AND PHASING PLAN - 2A

PLOT DATE: 6/2/2013
DRAWN BY: M. KEMP
CHECKED BY:
SHEET 8 OF 36

6/2/2013
P:\CADD\Consultants\z07h124cspp-2A.dgn

PROJECT RECORD DRAWINGS

PHASE 2B RUNWAY 1-19 DECLARED DISTANCES

	TORA		TODA		ASDA		LDA	
RUNWAY	1	19	1	19	1	19	1	19
EXISTING	5000′	5000′	5000′	5000′	5000′	5000′	5000′	5000′
PHASE 2B*	4350′	4550′	4350′	4550′	4350′	4550′	4350′	4350′

* WITH DISPLACED THRESHOLD IN PLACE

LEGEND

- EXISTING FENCE
- PROPOSED FENCE
- 755 EXISTING CONTOUR
- PROJECT DEMARCATION FENCE

N

VT STATE PLANE GRID

STATE OF VERMONT · DONALD M. D'AMICO · No. 3873 · REGISTERED PROFESSIONAL ENGINEER

CONSTRUCTION ENTRANCE

2 - 6′ x 10′ DRIVE GATES

VEHICLE TRACKING PAD FOR CONSTRUCTION ACCESS B

CONTRACTOR'S EQUIPMENT AREA B (100′ BY 200′)

VT ROUTE 7B

6′ CHAINLINK FENCE

16′ DRIVE GATE

STOP

APPROXIMATE LOCATION TEMPORARY TOPSOIL STOCKFILL 50′ X 50′

VTRANS TRANSPORTATION MAINTENANCE FACILITY

EXISTING ANTENNA TOWER

FLAGGER

PROPOSED HAUL ROUTE

CONSTRUCTION ENTRANCE

VEHICLE TRACKING PAD FOR CONSTRUCTION ACCESS C

STOP

APPROXIMATE LOCATION TEMPORARY TOPSOIL STOCKFILL 75′ X 50′

PROPOSED HAUL ROUTE

APPROXIMATE LIMITS OF EXISTING RSA

REMOVE MALS AND TOWER AT STATION 155+50

VT ROUTE 103

EXISTING RUNWAY MARKINGS TO BE REMOVED

CLOSED RUNWAY SEE NOTE

LOW PROFILE CONSTRUCTION BARRICADE

CLOSED RUNWAY SEE NOTE

FLAGGER

STA. 146+50

RUNWAY 1-19

19

1

INSTALL TEMPORARY DISPLACED THRESHOLD AT STATION 146+50

TAXIWAY CENTERLINE

INSTALL TEMPORARY PAPI STA 139+14 100′ RT

LIGHTED LOW PROFILE BARRICADE AT TAXIWAYS C AND E

TAXIWAY C

TAXIWAY E

EXISTING AIMING POINTS AND TOUCHDOWN ZONE MARKINGS TO BE REMOVED

NEW AIRPORT ROAD

AIRPORT ROAD AND ROUTE 103 TURNLANE TO BE CONSTRUCTED IN PHASE 1

0 120 240

SCALE IN FEET

AIP 3-50-0015-34

PHASING NOTES:

PROJECT CONSTRUCTION PHASE 2B
DURATION: APPROXIMATELY TWO MONTHS

MAJOR WORK ITEMS
COMPLETE CONSTRUCTION OF RUNWAY SAFETY AREA

SPECIFIC REQUIREMENTS
CLOSE RUNWAY 1-19 USING LIGHTED X'S AND INSTALL TEMPORARY DISPLACED THRESHOLD AND REMOVE EXISTING MARKINGS, INSTALL TEMPORARY PAPI

INSTALL PROJECT DEMARCATION FENCING AND LIGHTED LOW PROFILE BARRICADES, AS SHOWN

MAINTAIN EROSION AND SEDIMENTATION CONTROL MEASURES

HAUL AND PLACE EMBANKMENT TO FINAL GRADE

REMOVE MALS AND TOWER AT STATION 155+50

INSTALL DRAINAGE IN RSA

CONTRACTOR TO MAINTAIN FLAGGERS ON HAUL ROUTE AT VTRANS MAINTENANCE DRIVEWAY FOR TRAFFIC CONTROL AND GATE MONITORS

AIRFIELD IMPACTS
RUNWAY 1-19 TO BE CLOSED WHILE DISPLACED THRESHOLD AND AIMING POINTS ARE INSTALLED (WORK TO BE CONDUCTED BETWEEN 9:00 PM AND 6:00 AM) CONTRACTOR TO PROVIDE 72 HOURS NOTICE FOR ISSUANCE OF NOTAM

VASI ON RUNWAY 19 TO BE SHUT DOWN AND "NOTAM-ED" OUT OF SERVICE

MALSR AND GLIDE SLOPE WILL CONTINUE TO BE SHUT DOWN AND "NOTAM-ED" OUT OF SERVICE

GENERAL NOTE:

1. LIGHTED X'S TO BE IN PLACE DURING RUNWAY CLOSURE 9:00 PM TO 6:00 AM. RUNWAY 1-19 AND TAXIWAY "E" LIGHTS OFF.
2. TAXIWAY "E" AND "C" TO BE CLOSED USING LOW PROFILE BARRICADES WHEN RUNWAY 1-19 IS CLOSED, AND ON RUNWAY 1-19 NORTH OF TAXIWAY "B" AND 75' SOUTH OF RUNWAY 13-31 INTERSECTION.
3. CONSTRUCTION LIMITS TO BE MARKED USING PROJECT DEMARCATION FENCE.
4. SEE SHEETS 17 & 18 FOR DETAILS OF DISPLACED THRESHOLD.

VERMONT AGENCY OF TRANSPORTATION

URS
URS CORPORATION
3 CORPORATE DRIVE, SUITE 203
CLIFTON PARK, NY 12065
(518) 688-0015

PROJECT NAME: RUTLAND SOUTHERN VERMONT REGIONAL AIRPORT
CLARENDON, VERMONT
PROJECT NUMBER: AV14-8018-300

FILE NAME: z07h124cspp-2B.dgn
PROJECT LEADER: F. WALSH
DESIGNED BY: G. D'AMICO
CONST. SAFETY AND PHASING PLAN - 2B

PLOT DATE: 6/2/2013
DRAWN BY: M. KEMP
CHECKED BY:
SHEET 9 OF 36

6/2/2013
P:\CADD\Consultants\z07h124cspp-2B.dgn

PROJECT RECORD DRAWINGS

PHASE 2C RUNWAY 1-19 DECLARED DISTANCES

	TORA		TODA		ASDA		LDA	
RUNWAY	1	19	1	19	1	19	1	19
EXISTING	5000′	5000′	5000′	5000′	5000′	5000′	5000′	5000′
PHASE 2C*	4350′	4550′	4350′	4550′	4350′	4550′	4350′	4350′

* WITH RELOCATED THRESHOLD IN PLACE

LEGEND

- EXISTING FENCE
- PROPOSED FENCE
- 755 EXISTING CONTOUR
- PROJECT DEMARCATION FENCE

N

VT STATE PLANE GRID

CONSTRUCTION ENTRANCE

2 - 6′ x 10′ DRIVE GATES

VEHICLE TRACKING PAD FOR CONSTRUCTION ACCESS B

CONTRACTOR'S EQUIPMENT AREA B (100′ BY 200′)

16′ DRIVE GATE

STOP

VT ROUTE 7B

VTRANS TRANSPORTATION MAINTENANCE FACILITY

EXISTING ANTENNA TOWER

FLAGGER

REPAIR / REPAVE AIRPORT MAINTENANCE DRIVE

PROPOSED HAUL ROUTE

CONSTRUCTION ENTRANCE

VEHICLE TRACKING PAD FOR CONSTRUCTION ACCESS C

STOP

PROPOSED HAUL ROUTE

INSTALL MALS (SEE FAA DRAWINGS)

VT ROUTE 103

RESTORE RUNWAY MARKINGS

LOW PROFILE CONSTRUCTION BARRICADE

CLOSED RUNWAY SEE NOTE

FLAGGER

CLOSED RUNWAY SEE NOTE

RUNWAY 1-19

REMOVE TEMPORARY DISPLACED THRESHOLD AT STATION 146+50 AND AIMING POINTS AT STATION 136+50

REMOVE TEMPORARY PAPI RE-CONNECT VASI-4

LIGHTED LOW PROFILE BARRICADE AT TAXIWAYS C & E

TAXIWAY C

TAXIWAY E

NEW AIRPORT ROAD

0 120 240

SCALE IN FEET

AIP 3-50-0015-34

PHASING NOTES:

PROJECT CONSTRUCTION PHASE 2C
DURATION: APPROXIMATELY ONE MONTH

MAJOR WORK ITEMS
COMPLETE CONSTRUCTION IN RUNWAY SAFETY AREA

REMOVE PAPI AND RECONNECT VASI

INSTALL MALS (SEE FAA DRAWINGS)

SPECIFIC REQUIREMENTS
INSTALL MALS INCLUDING FOUNDATIONS, CONDUIT, WIRING AND ALL CONNECTIONS BETWEEN MALS. MAX ALLOWABLE ELEVATION OF CRANES / EQUIPMENT IS 794 FEET MSL.

REPAIR/REPAVE AIRPORT MAINTENANCE DRIVE

REMOVE PROJECT DEMARCATION FENCING AND EROSION AND SEDIMENTATION CONTROL MEASURES

REMOVE CONSTRUCTION SIGNING

COMPLETE THE FOLLOWING WORK NIGHTS BETWEEN 9:00 PM AND 6:00 AM ONLY

REMOVE DISPLACED THRESHOLD

RESTORE ORIGINAL THRESHOLD; REPLACE ORIGINAL MARKINGS

AIRFIELD IMPACTS
RUNWAY 1-19 TO BE CLOSED DURING REMOVAL OF PAPI AND DISPLACED THRESHOLD AND RESTORATION OF ORIGINAL THRESHOLD, AIMING POINTS AND TOUCHDOWN ZONE MARKINGS (CONTRACTOR TO PROVIDE 72 HOURS NOTICE FOR ISSUANCE OF NOTAM). MAXIMUM CLOSURE ALLOWED 48 HOURS.

GENERAL NOTES:

1. LIGHTED X'S TO BE IN PLACE DURING RUNWAY CLOSURE 9:00 PM TO 6:00 AM. RUNWAY 1-19 AND TAXIWAY "E" LIGHTS OFF.
2. TAXIWAY "E" AND "C" TO BE CLOSED USING LOW PROFILE BARRICADES WHEN RUNWAY 1-19 IS CLOSED, AND ON RUNWAY 1-19 NORTH OF TAXIWAY "B" AND 75′ SOUTH OF RUNWAY 13-31 INTERSECTION.
3. CONSTRUCTION LIMITS TO BE MARKED USING PROJECT DEMARCATION FENCE.
4. SEE SHEETS 17 & 18 FOR DETAILS OF RELOCATED THRESHOLD
5. PROVIDE FLAGGER DURING NORMAL VTRANS MAINTENANCE WORK HOURS, 0700-1530 WEEKDAYS AND WHEN DIRECTED BY THE ENGINEER.

VERMONT AGENCY OF TRANSPORTATION

URS
URS CORPORATION
3 CORPORATE DRIVE, SUITE 203
CLIFTON PARK, NY 12065
(518) 688-0015

PROJECT NAME: RUTLAND SOUTHERN VERMONT REGIONAL AIRPORT
CLARENDON, VERMONT
PROJECT NUMBER: AV14-8018-300

FILE NAME: z07h124cspp-2C.dgn
PROJECT LEADER: F. WALSH
DESIGNED BY: G. D'AMICO
CONST. SAFETY AND PHASING PLAN - 2C

PLOT DATE: 6/2/2013
DRAWN BY: M. KEMP
CHECKED BY:
SHEET 10 OF 36

6/2/2013
P:\CADD\Consultants\z07h124cspp-2C.dgn

PROJECT RECORD DRAWINGS

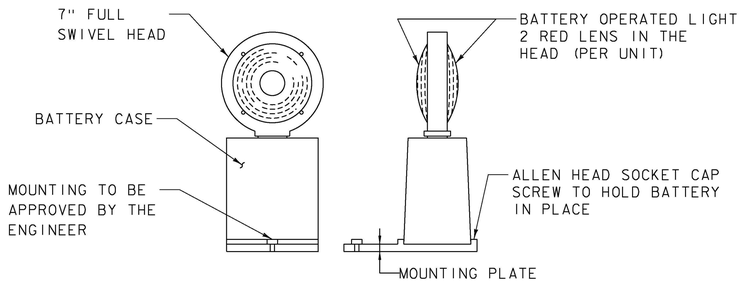

TEMPORARY BARRICADE LIGHT DETAIL
NOT TO SCALE

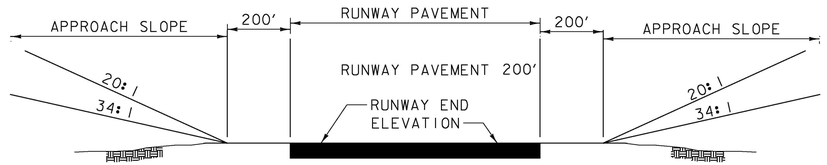

RUNWAY END	C/L ELEVATION	APROACH SLOPE
1	782	20: 1
19	774	34: 1
13	782	20: 1
31	782	20: 1

TYPICAL PROFILE

F A R PART 77 IMAGINARY SURFACES
NOT TO SCALE

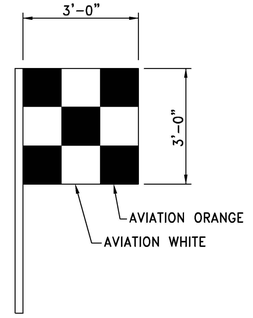

VEHICLE/EQUIPMENT FLAG
NOT TO SCALE

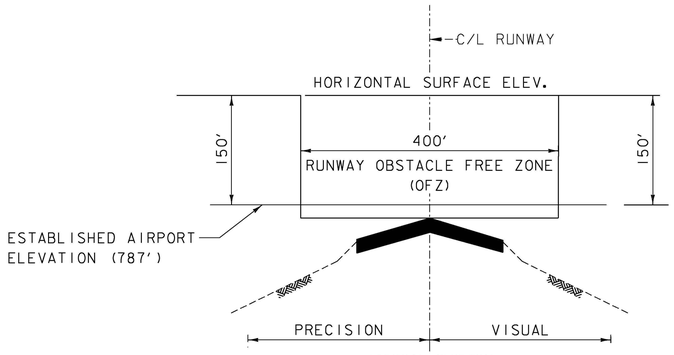

TYPICAL SECTION

OBSTACLE FREE ZONE (OFZ)
NOT TO SCALE

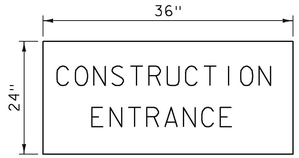



R1-1
SEE VTRANS STANDARD DETAIL E-143



W20-7a
SEE VTRANS STANDARD DETAIL E-119

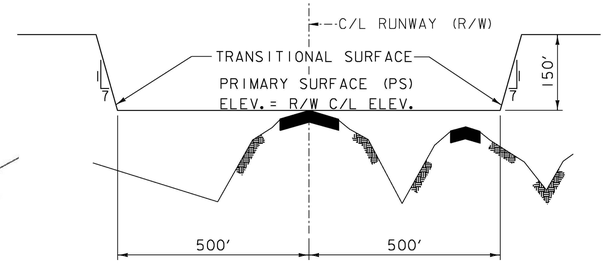

TYPICAL SECTION

F A R PART 77 IMAGINARY SURFACES
NOT TO SCALE

PHASING NOTES:

1. THE INTENT OF THE PHASING PLANS IS TO MINIMIZE THE IMPACT OF CONSTRUCTION ON THE OPERATION OF THE AIRPORT. THE CONTRACTOR SHALL CONSTRUCT THE PROJECT AS OUTLINED IN THE PLANS UNLESS OTHERWISE APPROVED BY THE RESIDENT ENGINEER AND THE VT AGENCY OF TRANSPORTATION [VTRANS]. ADJUSTMENTS TO THE PHASING PLAN MAY BE NECESSARY AT TIMES TO ACCOMMODATE AIRPORT OPERATIONS.

2. THE CONTRACTOR SHALL PROVIDE PORTABLE FLOOD LIGHTING FOR NIGHTTIME CONSTRUCTION. SUFFICIENT UNITS SHALL BE PROVIDED SO THAT WORK AREAS ARE ILLUMINATED TO A LEVEL OF FIVE HORIZONTAL FOOT CANDLES. THE LIGHTING LEVELS SHALL BE CALCULATED AND MEASURED IN ACCORDANCE WITH THE CURRENT STANDARDS OF THE ILLUMINATION SOCIETY. LIGHTS SHALL BE POSITIONED IN SUCH A WAY THAT THEY WILL NOT INTERFERE WITH AIRPORT OPERATIONS OR AIR TRAFFIC OR ROADWAY TRAFFIC.

3. ALL RUNWAY CLOSURES MUST BE COORDINATED WITH THE RESIDENT ENGINEER AND AIRPORT MANAGEMENT AT LEAST 72 HOURS IN ADVANCE. THE CLOSURE WILL BE CONTINGENT UPON A NATIONAL WEATHER SERVICE FORECAST FOR ACCEPTABLE WEATHER AT THE PROPOSED CLOSURE TIME.

4. SAFETY ZONES - THE FAA HAS DESIGNATED SAFETY ZONES SURROUNDING RUNWAYS AND TAXIWAYS. RUNWAY SAFETY AREAS (RSA) AND TAXIWAY OBJECT FREE AREAS (TOFA) DIMENSIONS ARE 200' AND 66' FROM CENTERLINE RESPECTIVELY. NO MEN OR EQUIPMENT ARE PERMITTED WITHIN AN RSA OR TOFA WHILE THE RUNWAY OR TAXIWAY IS OPEN.

5. PRIOR TO OPENING A CLOSED RUNWAY OR TAXIWAY THE SAFETY AREA MUST MEET FAA CRITERIA LISTED BELOW. FOR RUNWAY AND TAXIWAY SAFETY AREAS FAA CRITERIA REQUIRES THAT THERE WILL BE NO OPEN EXCAVATIONS OR TRENCHES, THE MAXIMUM DROP-OFF IS 3-INCHES, ALL GRADES IN ANY DIRECTION BE LESS THAN 5 PERCENT AND THE GROUND TO BE CAPABLE OF SUPPORTING THE WEIGHT OF AN AIRCRAFT. THERE WILL BE NO RUTS, STONES LARGER THAN 3/4", OR ANY DEBRIS THAT MAY AFFECT AIRCRAFT DIRECTIONAL CONTROL. THE CONTRACTOR SHALL NOT BE PERMITTED TO LEAVE ANY TRENCHES OR OTHER EXCAVATIONS OPEN AT NIGHT OR ON WEEKENDS OR AT ANY OTHER TIME WHEN HE IS NOT ON SITE.

6. THE CONTRACTOR SHALL SUBMIT A DETAILED CONSTRUCTION SCHEDULE FOR REVIEW AND APPROVAL BY THE RESIDENT ENGINEER AND VTRANS AT LEAST 10 DAYS PRIOR TO STARTING CONSTRUCTION. STRICT ADHERENCE TO THE APPROVED SCHEDULE WILL BE ENFORCED TO AVOID CONFLICTS WITH OTHER CONSTRUCTION ACTIVITIES AND ADVERSE EFFECTS ON AIRPORT OPERATIONS.

7. BEFORE ANY WORK IS STARTED ON ANY PHASE OF THIS PROJECT AND ALSO BEFORE FINAL ACCEPTANCE BY VTRANS AND THE RESIDENT ENGINEER, REPRESENTATIVES OF THE AIRPORT AND THE RESIDENT ENGINEER SHALL MAKE AN INSPECTION OF THE EXISTING STORM SEWERS, CATCH BASINS, MANHOLES, HANDHOLES, DUCTBANKS, TAXIWAY AND RUNWAY LIGHTS WHICH ARE TO REMAIN IN SERVICE AND EXISTING PAVEMENTS WHICH MAY BE AFFECTED BY THE WORK. THE CONDITION OF EXISTING CONDUITS, FIXTURES AND THEIR RELATED APPURTENANCES SHALL BE DETERMINED FROM FIELD OBSERVATIONS. RECORDS OF THE INSPECTION WILL BE KEPT BY THE RESIDENT ENGINEER. ALL EXISTING FACILITIES, INSPECTED INITIALLY BY THE ABOVE MENTIONED PARTIES, SHALL BE PROTECTED, MAINTAINED, AND LEFT IN A GOOD CONDITION COMPARABLE TO THAT DETERMINED BY THE ORIGINAL INSPECTION. ANY CHANGES IN THE CONDITION RESULTING FROM EITHER THE PRIME OR SUBCONTRACTOR'S OPERATIONS SHALL BE CORRECTED BY THE PRIME CONTRACTOR AT HIS EXPENSE TO THE SATISFACTION OF THE RESIDENT ENGINEER AND RUT.

8. POSITIVE DRAINAGE SHALL BE PROVIDED AT ALL TIMES. SEDIMENT AND EROSION CONTROL DEVICES MUST BE IN PLACE PRIOR TO THE START OF GRADING OPERATIONS.

9. THE CONTRACTOR SHALL NOT PLACE EQUIPMENT AND PERSONNEL WITHIN THE RUNWAY OR TAXIWAY SAFETY AREAS WITHOUT PRIOR APPROVAL FROM THE AIRPORT MANAGER.

10. THE CONTRACTOR SHALL PROVIDE, MAINTAIN, MOVE, AND REMOVE CONSTRUCTION BARRICADES (AS DIRECTED) TO DELINEATE AREAS CLOSED TO AIRCRAFT TRAFFIC.

11. PAVEMENTS, OPEN TO USE BY EITHER AIRCRAFT OR VEHICLES, BOTH ON AIRFIELD AND NON-AIRFIELD, MUST BE CLEAR AND FREE OF DEBRIS AT ALL TIMES. THE CONTRACTOR MUST PROVIDE A VACUUM SWEEPING MACHINE AND OPERATOR ON-SITE AND READY AT ALL TIMES DURING CONSTRUCTION ACTIVITY. ALL ROCKS, MUD, AND OTHER DEBRIS CARRIED ONTO AIRPORT PAVEMENTS BY THE CONTRACTOR'S EQUIPMENT MUST BE REPORTED TO THE ENGINEER OR THE AIRPORT MANAGER. THE AIRPORT MANAGER WILL THEN CLOSE THE AFFECTED AREA TO AIR TRAFFIC AND THE CONDUCTOR WILL IMMEDIATELY SWEEP THE AREA TO THE SATISFACTION OF THE AIRPORT MANAGER.

12. THE CONTRACTOR SHALL HAVE BOTH A WATER TRUCK AND A POWER BROOM, AND OPERATORS ON SITE AND READY AT ALL TIMES DURING OPERATIONS FOR DUST AND FOD CONTROL.

13. THE CONTRACTOR MUST PROVIDE A GATE GUARD AT THE DESIGNATED AOA ACCESS GATE AT ALL TIMES WHEN THE CONTRACTOR'S PERSONNEL ARE ON THE AIRFIELD. THE GATE GUARD WILL BE TRAINED IN AIRPORT SECURITY REQUIREMENTS. ACCESS TO THE AIRFIELD IS NOT PERMITTED DURING NON-WORKING HOURS OR WHEN A GUARD IS NOT PRESENT.

14. COORDINATE ANY NECESSARY UTILITY EFFORTS WITH THE CORRESPONDING UTILITY COMPANY, THE FAA AND VTRANS.

15. INTENTIONALLY LEFT BLANK.

16. THE CONTRACTOR MUST COMPLY WITH ALL APPLICABLE FAA ADVISORY CIRCULARS AND FEDERAL AVIATION REGULATIONS. [WWW.FAA.GOV]

17. MAXIMUM EQUIPMENT HEIGHTS IN WORK AREAS AND STAGING AREA ARE LIMITED BY FAR PART 77 AND OBSTACLE FREE ZONE (OFZ) SURFACES AS SHOWN IN DETAILS ON THIS SHEET.

18. THE OBSTACLE FREE ZONE (OFZ) SHALL GOVERN EQUIPMENT CLEARANCE DURING CONSTRUCTION ADJACENT TO AN ACTIVE RUNWAY. IN NO CIRCUMSTANCES SHALL ANY MEN OR EQUIPMENT PENETRATE THESE SURFACES UNLESS PRIOR ARRANGEMENTS HAVE BEEN MADE WITH AIRPORT OPERATIONS.

19. THE FAR PART 77 SURFACES (PRIMARY AND TRANSITIONAL) GOVERN STOCKPILE AND PARKED EQUIPMENT. UNDER NO CIRCUMSTANCES SHALL PARKED EQUIPMENT, STOCKPILES, OR OTHER ITEMS PENETRATE THESE SURFACES.

AIP 3-50-0015-34

VERMONT AGENCY OF TRANSPORTATION

URS
URS CORPORATION
3 CORPORATE DRIVE, SUITE 203
CLIFTON PARK, NY 12065
(518) 688-0015

PROJECT NAME: RUTLAND SOUTHERN VERMONT REGIONAL AIRPORT
CLARENDON, VERMONT
PROJECT NUMBER: AV14-8018-300

FILE NAME: z07hl24cspp_det1.dgn
PROJECT LEADER: F. WALSH
DESIGNED BY: G. D'AMICO
SAFETY PHASING PLAN, NOTES & DETAILS (1)
PLOT DATE: 6/2/2013
DRAWN BY: M. KEMP
CHECKED BY:
SHEET 11 OF 36

PROJECT RECORD DRAWINGS

6/2/2013
P:\CADD\Consultants\z07hl24cspp_det1.dgn

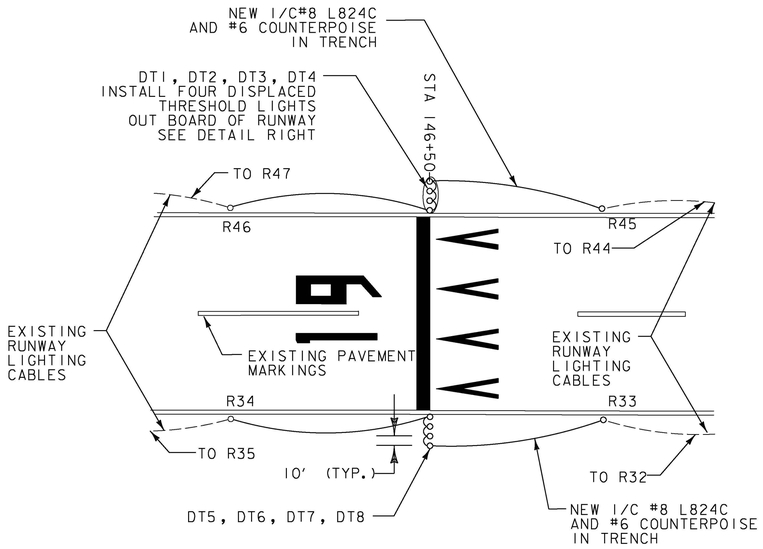

1. ALL MARKINGS TO BE PAINTED. SEE DETAIL SHEETS 17 & 18.
2. EIGHT (8) MEDIUM INTENSITY RUNWAY THRESHOLD LIGHTS (CONFORMING TO FAA SPECIFICATIONS L-861E) TO BE INSTALLED AS SHOWN.
3. TEMPORARY THRESHOLD LIGHTS TO BE STAKE OR CAN MOUNTED AT CONTRACTORS OPTION.
4. WHILE PREPARING TEMPORARY THRESHOLD, LIGHTED RUNWAY CLOSURE MARKERS TO BE IN PLACE OVER NUMERALS 1 AND 19.
5. REMOVE EXISTING PAINT WHICH CONTRASTS WITH TEMPORARY PAINT BY SANDBLAST, WATERBLAST, OR CHEMICAL REMOVAL TO THE SATISFACTION OF THE ENGINEER.
6. THE COST OF THE TEMPORARY MARKINGS TO BE PAID UNDER ITEM P-620-5.1.
7. EXISTING LIGHTING CIRCUITS
   ... R35 - R34 - R - 33 - ; R44 - R45 - R46...

   TEMPORARY DISPLACED LIGHTING CIRCUITS
   ... R33 - DT5 - DT6 - DT7 - DT8 - R34 - R35...
   ... R44 - R45 - DT1 - DT2 - DT3 - DT4 - R46...
8. RUNWAY 19 LENGTH AVAILABLE DURING DISPLACEMENT = 4350 LF
9. RUNWAY EDGE LIGHTING IN DISPLACED THRESHOLD AREA (STA 146+50 --> 153+) WILL BE COVERED TO PREVENT VISUAL EXPOSURE - TYPICALLY PLACE AND SECURE A CAN OVER GLOBES.

TEMPORARY RELOCATED THRESHOLD AND THRESHOLD LIGHTS DETAIL

NO SCALE

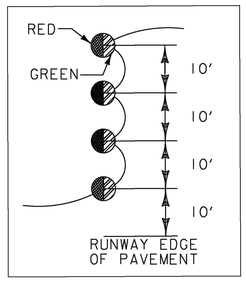

RELOCATED THRESHOLD LIGHTING DETAIL

NO SCALE

PHASING NOTES

1. ALL WORK WITHIN THE RUNWAY OBJECT FREE AREA (ROFA) MUST BE COORDINATED WITH AIRPORT OPERATIONS AND THE AIR TRAFFIC CONTROL TOWER. PROJECT COORDINATION MEETINGS TO BE SCHEDULED WITH AIRPORT OPERATIONS, ATCT, AND THE RESIDENT ENGINEER EACH WORK DAY. RUNWAY CLOSURES REQUIRE A MINIMUM OF 72 DAYS NOTICE FOR AIRPORT TO PREPARE NOTAMS AND COORDINATE CLOSURE WITH USERS.
2. RUNWAY 1-19 WILL REMAIN OPEN AT ALL TIMES EXCEPT DURING INSTALLATION AND REMOVAL OF DISPLACED THRESHOLD.
3. INSTALL LOW PROFILE CONSTRUCTION BARRICADES WHERE DIRECTED BY THE ENGINEER.

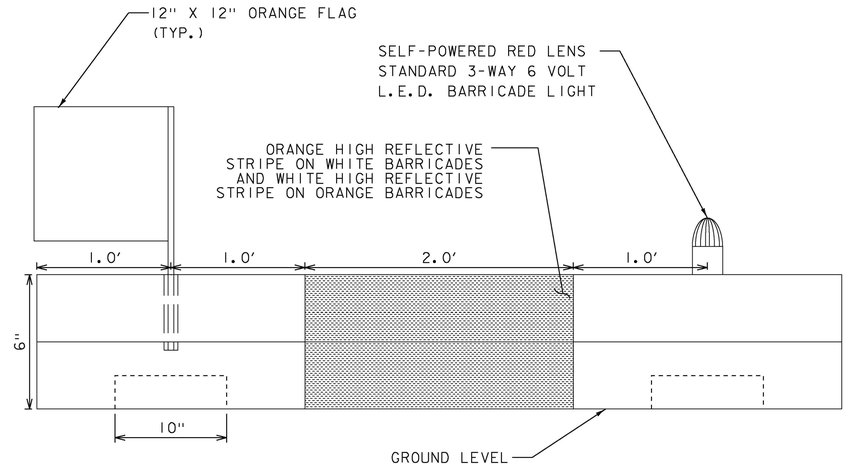

NOTES

1. BARRICADE CONSTRUCTED OF HIGH IMPACT, UV-RESISTANT POLYETHYLENE.
2. EACH UNIT SHALL INCLUDE RED STANDARD 2-WAY LIGHT, 12" ORANGE FLAG AND 3M HIGH REFLECTIVE ORANGE TAPE
3. BARRICADES SHALL BE PLACED AS SHOWN UNLESS OTHERWISE DIRECTED BY THE RESIDENT ENGINEER. PAYMENT FOR SUPPLYING, MAINTAINING, PLACING, AND REMOVING THE BARRICADES IS INCIDENTAL TO THE OTHER ITEMS OF WORK.
4. FOR ADDITIONAL INFORMATION ON CLOSED RUNWAY MARKERS AND LOW PROFILE BARRICADES, REFER TO THE FOLLOWING:

   A. WWW.AIRPORTNAC.COM
   B. WWW. TMCSAFETY.COM
   C. WWW.TRAFFICSAFETYEQUIPMENT.COM
   D. WWW.EMEDCO.COM
   E. WWW.MULTI-BARRIER.COM
5. BARRICADES TO BE FILLED WITH WATER OR SAND BAGGED AND PLACED WHERE DIRECTED BY THE ENGINEER TO PREVENT ACCESS TO A.O.A.

LOW PROFILE CONSTRUCTION BARRICADE

NO SCALE

TO BE PLACED WHERE DIRECTED BY THE ENGINEER. NOT A SEPARATE PAY ITEM. SHOWN AS THE SYMBOL "-.-.-.-" ON PLAN.

STATE OF VERMONT
GERALD M. D'AMICO
No. 3073
REGISTERED
PROFESSIONAL ENGINEER

AIP 3-50-0015-34

VERMONT AGENCY OF TRANSPORTATION

URS
URS CORPORATION
3 CORPORATE DRIVE, SUITE 203
CLIFTON PARK, NY 12065
(518) 688-0015

PROJECT NAME: RUTLAND SOUTHERN VERMONT REGIONAL AIRPORT
CLARENDON, VERMONT
PROJECT NUMBER: AV14-8018-300

FILE NAME: z07h124cspp_det2.dgn
PROJECT LEADER: F. WALSH
DESIGNED BY: G. D'AMICO
SAFETY PHASING PLAN, NOTES & DETAILS (2)
PLOT DATE: 6/2/2013
DRAWN BY: M. KEMP
CHECKED BY:
SHEET 12 OF 36

PROJECT RECORD DRAWINGS

6/2/2013
P:\CADD\Consultants\z07h124cspp_det2.dgn

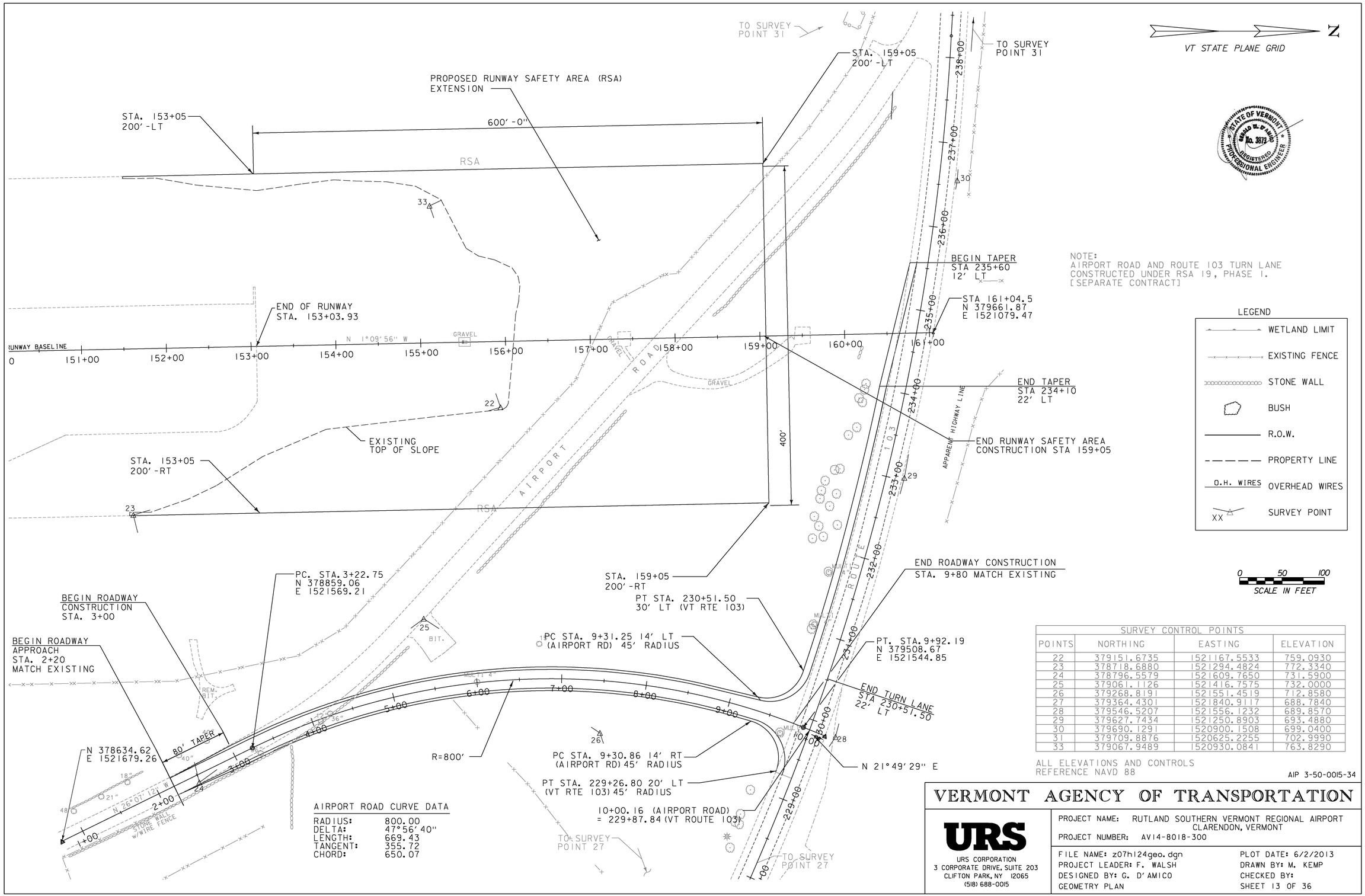

STATE OF VERMONT
DONALD W. D'AMICO
No. 3673
REGISTERED PROFESSIONAL ENGINEER

AIRPORT ROAD CURVE DATA

RADIUS:	800.00
DELTA:	47°56'40"
LENGTH:	669.43
TANGENT:	355.72
CHORD:	650.07

SURVEY CONTROL POINTS

POINTS	NORTHING	EASTING	ELEVATION
22	379151.6735	1521167.5533	759.0930
23	378718.6880	1521294.4824	772.3340
24	378796.5579	1521609.7650	731.5900
25	379061.1126	1521416.7575	732.0000
26	379268.8191	1521551.4519	712.8580
27	379364.4301	1521840.9117	688.7840
28	379546.5207	1521556.1232	689.8570
29	379627.7434	1521250.8903	693.4880
30	379690.1291	1520900.1508	699.0400
31	379709.8876	1520625.2255	702.9990
33	379067.9489	1520930.0841	763.8290

ALL ELEVATIONS AND CONTROLS REFERENCE NAVD 88

AIP 3-50-0015-34

VERMONT AGENCY OF TRANSPORTATION

URS
URS CORPORATION
3 CORPORATE DRIVE, SUITE 203
CLIFTON PARK, NY 12065
(518) 688-0015

PROJECT NAME: RUTLAND SOUTHERN VERMONT REGIONAL AIRPORT CLARENDON, VERMONT
PROJECT NUMBER: AV14-8018-300

FILE NAME: z07h124geo.dgn
PROJECT LEADER: F. WALSH
DESIGNED BY: G. D'AMICO
GEOMETRY PLAN
PLOT DATE: 6/2/2013
DRAWN BY: M. KEMP
CHECKED BY:
SHEET 13 OF 36

6/2/2013
P:\CADD\Consultants\z07h124geo.dgn

PROJECT RECORD DRAWINGS

N

VT STATE PLANE GRID

Record Drawing
Finished grades are shown on Attachment A: Construction Survey Record Plan

STATE OF VERMONT
DONALD W. D'AMICO
No. 3872
REGISTERED
PROFESSIONAL ENGINEER

APPROXIMATE CONSTRUCTION LIMITS

REMOVE EXISTING ROADWAY PAVEMENT BETWEEN TOE OF RSA AND ROUTE 103 (ITEM P-152-4.1), REPLACE WITH TOPSOIL, SEED AND MULCH

REMOVE EXISTING BERM

SCARIFY EXISTING ROADWAY PAVEMENT PRIOR TO PLACING BACKFILL. NOT A SEPARATE PAY ITEM.

PROPOSED RETAINING WALL

APPROXIMATE CONSTRUCTION LIMITS

PROPOSED LIMITS OF COMPACTED SAND BORROW ⚠1

RELOCATED FENCE - SEE ATTACHMENT A

REMOVE EXISTING ROADWAY PAVEMENT BETWEEN TOE OF RSA AND ROUTE 103 (ITEM P-152-4.1), REPLACE WITH TOPSOIL, SEED AND MULCH

AIRPORT ROAD AND ROUTE 103 TURNLANE TO BE COMPLETED UNDER PHASE I

LEGEND

- CONSTRUCTION LIMITS
- 710 EXISTING CONTOUR W/ELEV.
- EXISTING INT. CONTOUR
- TEST PITS
- B-56 SOIL BORINGS
- PHASE II CONST LIMITS
- REINFORCED SOIL SLOPE AREA
- SCARIFY EXISTING PAVEMENT

NOTES:

1. CONTRACTOR TO REMOVE AND DISPOSE OF EXISTING APPROACH LIGHTS AND TOWERS AT STATIONS 155+50, 157+50, 159+50 (REFER TO FAA DRAWINGS RUT-NEZ 120015_).
2. CONSTRUCT REINFORCED SOIL SLOPE (RSS) ON SLOPES STEEPER THAN 2H : 1V. SEE DETAILS ON SHEETS 19 AND 20.
3. CONTRACTOR RESPONSIBLE FOR MAINTAINING POSITIVE DRAINAGE WHILE PLACING EMBANKMENT.
4. IN THE EVENT THAT THE EMBANKMENT CAN NOT BE COMPLETED BEFORE WINTER SHUT DOWN, ALL EXPOSED/DISTURBED AREAS SHALL BE SEEDED AND MULCHED. ALL SUN FACES SHALL BE GRADED TO DRAIN.
5. ALL WASTE MATERIALS, INCLUDING OVERSIZED ROCKS, STUMPS, BRUSH AND OTHER DEBRIS ARE TO BE REMOVED FROM AIRPORT PROPERTY. BURNING BRUSH IS NOT ALLOWED ON AIRPORT PROPERTY. COST OF REMOVAL IS INCIDENTAL TO ITEM P-151-4.3 CLEARING AND GRUBBING.

⚠1 6/11/13 ADDENDUM 1

0 50 100
SCALE IN FEET

AIP 3-50-0015-34

VERMONT AGENCY OF TRANSPORTATION

URS
URS CORPORATION
3 CORPORATE DRIVE, SUITE 203
CLIFTON PARK, NY 12065
(518) 688-0015

PROJECT NAME: RUTLAND SOUTHERN VERMONT REGIONAL AIRPORT
CLARENDON, VERMONT
PROJECT NUMBER: AV14-8018-300

FILE NAME: z07h124gp_rsa.dgn	PLOT DATE: 6/11/2013
PROJECT LEADER: F. WALSH	DRAWN BY: M. KEMP
DESIGNED BY: G. D'AMICO	CHECKED BY:
RUNWAY SAFETY AREA-GRADING PLAN	SHEET 14 OF 36

6/11/2013
P:\CADD\Consultants\z07h124gp_rsa.dgn

PROJECT RECORD DRAWINGS

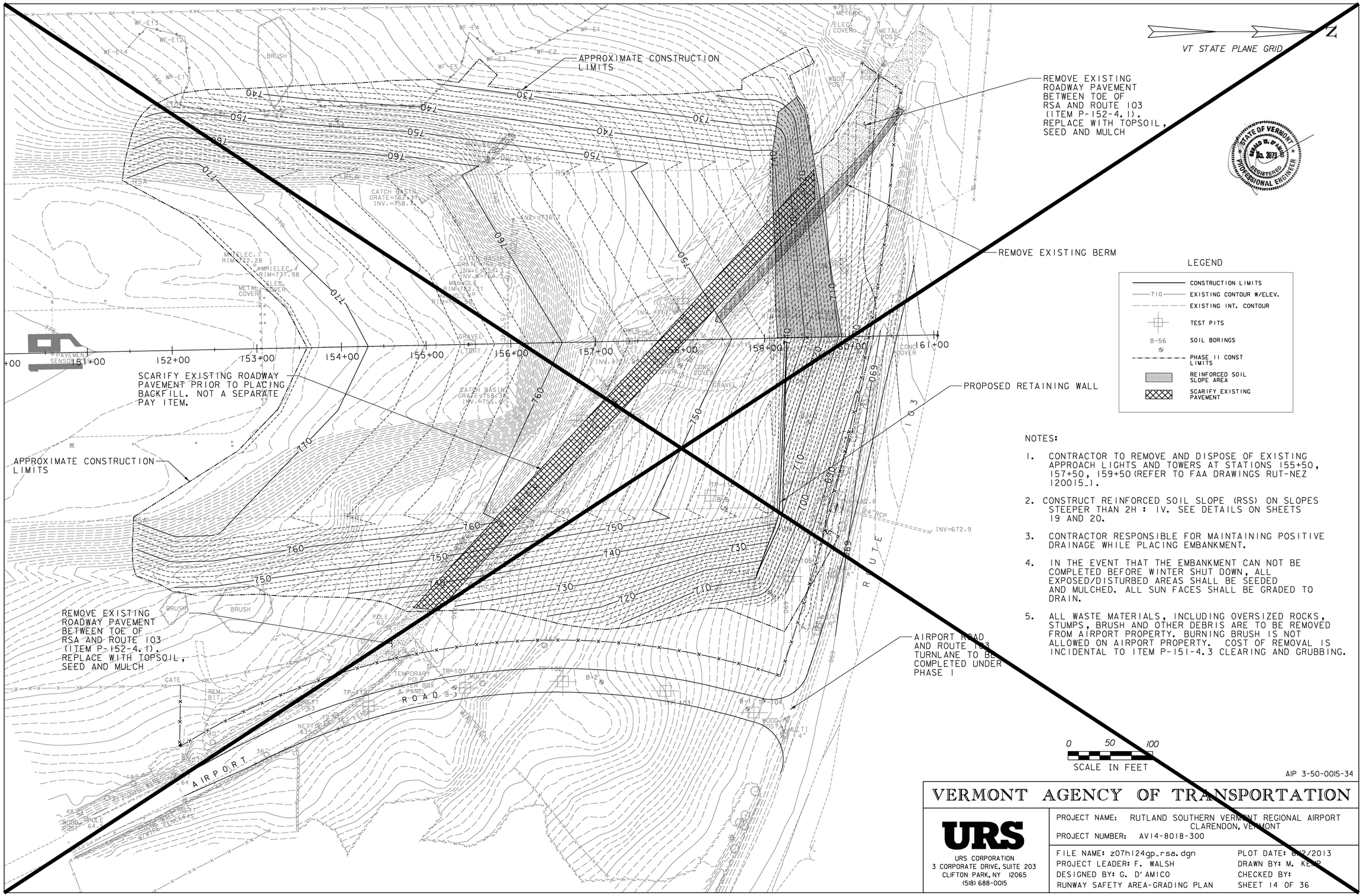

LEGEND

- CONSTRUCTION LIMITS
- 710 EXISTING CONTOUR W/ELEV.
- EXISTING INT. CONTOUR
- TEST PITS
- B-56 SOIL BORINGS
- PHASE II CONST LIMITS
- REINFORCED SOIL SLOPE AREA
- SCARIFY EXISTING PAVEMENT

NOTES:

1. CONTRACTOR TO REMOVE AND DISPOSE OF EXISTING APPROACH LIGHTS AND TOWERS AT STATIONS 155+50, 157+50, 159+50 (REFER TO FAA DRAWINGS RUT-NEZ 120015_).
2. CONSTRUCT REINFORCED SOIL SLOPE (RSS) ON SLOPES STEEPER THAN 2H : 1V. SEE DETAILS ON SHEETS 19 AND 20.
3. CONTRACTOR RESPONSIBLE FOR MAINTAINING POSITIVE DRAINAGE WHILE PLACING EMBANKMENT.
4. IN THE EVENT THAT THE EMBANKMENT CAN NOT BE COMPLETED BEFORE WINTER SHUT DOWN, ALL EXPOSED/DISTURBED AREAS SHALL BE SEEDED AND MULCHED. ALL SUN FACES SHALL BE GRADED TO DRAIN.
5. ALL WASTE MATERIALS, INCLUDING OVERSIZED ROCKS, STUMPS, BRUSH AND OTHER DEBRIS ARE TO BE REMOVED FROM AIRPORT PROPERTY. BURNING BRUSH IS NOT ALLOWED ON AIRPORT PROPERTY. COST OF REMOVAL IS INCIDENTAL TO ITEM P-151-4.3 CLEARING AND GRUBBING.

0 50 100
SCALE IN FEET

AIP 3-50-0015-34

VERMONT AGENCY OF TRANSPORTATION

URS
URS CORPORATION
3 CORPORATE DRIVE, SUITE 203
CLIFTON PARK, NY 12065
(518) 688-0015

PROJECT NAME: RUTLAND SOUTHERN VERMONT REGIONAL AIRPORT CLARENDON, VERMONT
PROJECT NUMBER: AV14-8018-300

FILE NAME: z07h124gp_rsa.dgn
PROJECT LEADER: F. WALSH
DESIGNED BY: G. D'AMICO
RUNWAY SAFETY AREA-GRADING PLAN
PLOT DATE: 6/2/2013
DRAWN BY: M. KEMP
CHECKED BY:
SHEET 14 OF 36

6/2/2013
P:\CADD\Consultants\z07h124gp_rsa.dgn

PROJECT RECORD DRAWINGS

"MH 1"
STA 155+32
282' LT.
RIM = 737.92
INV. IN = 732.92 (SE)
INV. OUT = 732.75 (NW)

STONE FILL TYPE I

18" CPEPES
STA 155+54
301' LT.
INV. OUT = 731.6

18" CPEPES
STA 159+37
320' LT.
INV. OUT = 713.0

"MH 4"
STA 158+77
272' LT.
RIM = 723.67
INV. IN = 719.31 (SE)
INV. OUT = 715.96 (NW)

23' - 18.00" CPEP

132' - 18.00" CPEP

72' - 18.00" CPEP

87' - 18.00" CPEP

"DI 3"
STA 159+02
200' LT.
RIM = 743.06
INV. OUT = 738.06 (S)

175' - 18.00" CPEP

52' - 18.00" CPEP

"DI 1"
STA 154+35
200' LT
RIM = 765.08
INV. OUT = 757.03 (NW)

"DI 2"
STA 156+67
200' LT.
RIM = 753.96
INV. OUT = 749.46 (N)

"DI 7"
STA 158+45
200' LT.
RIM = 745.22
INV. IN = 737.80 (N)
INV. IN = 740.78 (S)
INV. OUT = 737.80 (NW)

REMOVE EXISTING DRAINAGE STRUCTURES AND PIPES

END OF RUNWAY

REMOVE EXISTING DRAINAGE STRUCTURE AND PIPE

"DI 4"
STA 154+35
200' RT.
RIM = 765.40
INV. OUT = 761.24 (N)

"DI 5"
STA 156+68
200' RT.
RIM = 754.87
INV. IN = 750.70 (S)
INV. OUT = 750.20 (N)

"DI 6"
STA 159+00
200' RT.
RIM = 743.08
~~INV. IN = 738.08 (S)~~
~~INV. OUT = 730.00 (E)~~
INV. OUT = 738.44 (S)

50 ft

228' - 18.00" CPEP

227' - 18.00" CPEP

117' - 18.00" CPEP

18" CPEP

"MH 5"
STA 158+58
314' RT.
RIM = 697.00
INV. IN = 692.83 (W)
INV. OUT = 692.33 (N)

57' - 18.00" CPEP

81' - 18.00" CPEP

New Manhole
Rim 745.72
Inv In = 738.02 (S)
Inv In = 738.00 (N)
Inv Out = 730.63 (E)

"MH 3"
STA 159+15
337' RT.
RIM = 690.16
INV. IN = 687.01 (S)
INV. OUT = 686.51 (NW)

"MH 6"
AIRPORT ROAD CL STA 8+94
110' RT.
RIM = 691.8
INV. IN = 684.84 (W)
INV. OUT = 684.84 (E)

51' - 30" CPEP

"MH 7"
AIRPORT ROAD CL STA 8+86
150' RT.
RIM = 691.8
INV. IN = 684.4 (W)
INV. OUT = 684.4 (NE)

TO BE COMPLETED UNDER PHASE I

TO BE COMPLETED UNDER PHASE I

PROPOSED RETAINING WALL

HEADWALL COMPLETED UNDER PHASE I

6' 24" RCP EXTENSION COMPLETED UNDER PHASE I

STONE FILL TYPE I

STONE FILL TYPE I

ROUTE 103

AIRPORT ROAD

NEW AIRPORT ROAD

VT STATE PLANE GRID

Record Drawings
Manhole finished rims and locations are shown on Attachment A: Construction Survey Record Plan

LEGEND

- 710 EXISTING CONTOUR W/ELEV.
- EXISTING INT. CONTOUR
- 710 PROPOSED CONTOUR W/ELEV.
- PROPOSED INT. CONTOUR

NOTE:
CONTRACTOR TO INSTALL 6" PVC UNDER DRAIN A MINIMUM OF 2' FROM TAIL OF PRECAST RETAINING WALL BLOCKS

PHASE I AWARDED UNDER SEPARATE CONTRACT

STATE OF VERMONT
DONALD W. D'AMICO
No. 3873
REGISTERED
PROFESSIONAL ENGINEER

0 50 100
SCALE IN FEET

AIP 3-50-0015-34

VERMONT AGENCY OF TRANSPORTATION

URS
URS CORPORATION
3 CORPORATE DRIVE, SUITE 203
CLIFTON PARK, NY 12065
(518) 688-0015

PROJECT NAME: RUTLAND SOUTHERN VERMONT REGIONAL AIRPORT
CLARENDON, VERMONT
PROJECT NUMBER: AV14-8018-300

FILE NAME: z07h124drn.dgn
PROJECT LEADER: F. WALSH
DESIGNED BY: G. D'AMICO
DRAINAGE PLAN

PLOT DATE: 6/2/2013
DRAWN BY: M. KEMP
CHECKED BY:
SHEET 15 OF 36

PROJECT RECORD DRAWINGS

6/2/2013
P:\CADD\Consultants\z07h124drn.dgn

PHASE II WEST 1

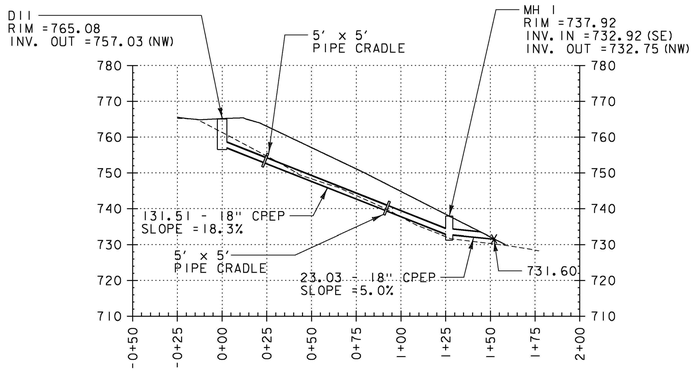

LINE	SURFACE
———	PROPOSED
- - - - - -	EXISTING

Scaled 2 Times Ver.
Scaled 1 Times Hor.

PHASE II WEST 2

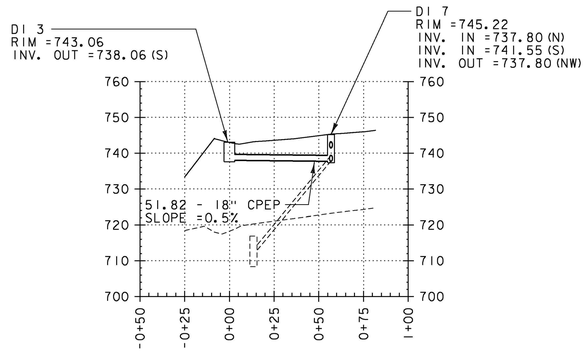

LINE	SURFACE
———	PROPOSED
- - - - - -	EXISTING

Scaled 2 Times Ver.
Scaled 1 Times Hor.

PHASE II WEST 3

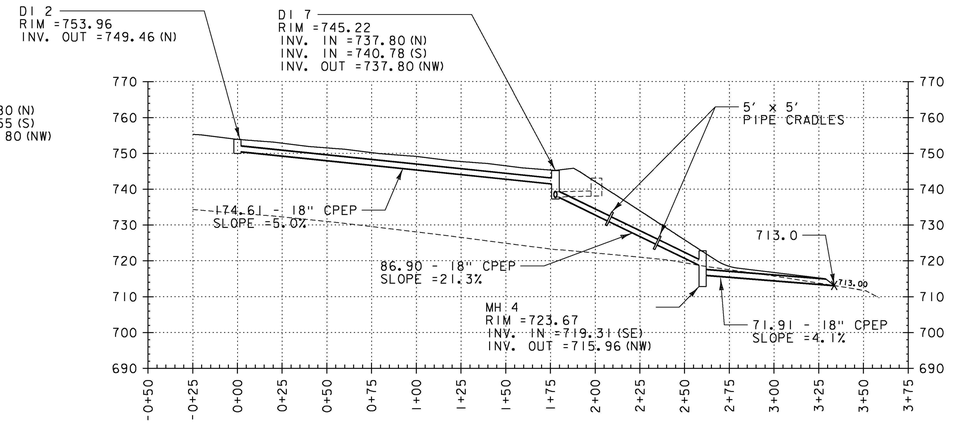

LINE	SURFACE
———	PROPOSED
- - - - - -	EXISTING

Scaled 2 Times Ver.
Scaled 1 Times Hor.

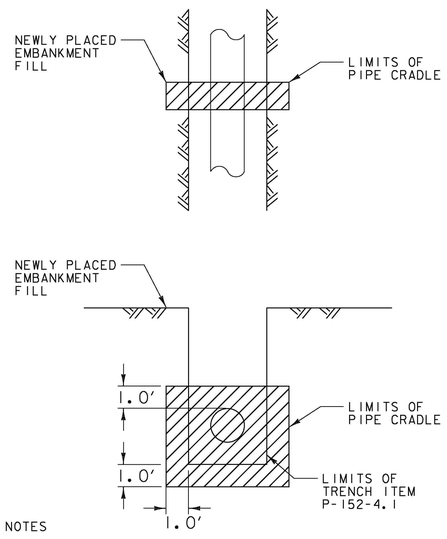

NOTES

COLLAR EXTENDS A MINIMUM OF 12" INTO NEWLY PLACED EMBANKMENT ON EACH SIDE AND ON BOTTOM OF TRENCH.

SPACE COLLARS A MAXIMUM OF 400 FEET APART

PIPE CRADLES (COLLARS) ITEM D-701-5.2
NTS

PHASE II EAST

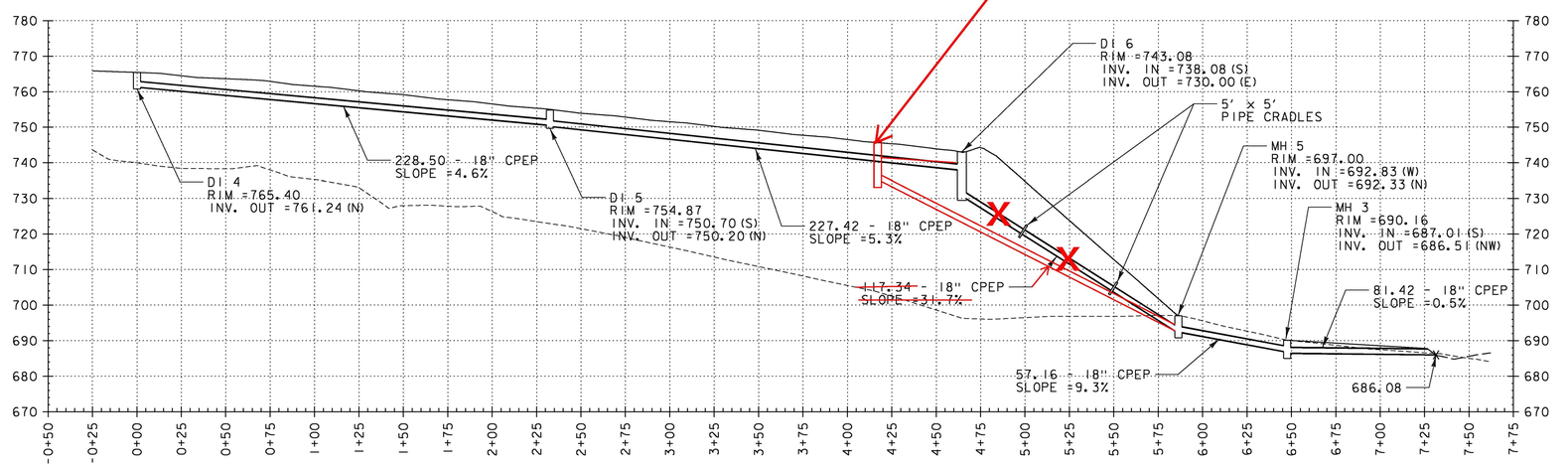

LINE	SURFACE
———	PROPOSED
- - - - - -	EXISTING
- - - - - -	ROADSIDE DITCH

Scaled 2 Times Ver.
Scaled 1 Times Hor.

STATE OF VERMONT
DONALD M. D'AMICO
No. 3873
REGISTERED
PROFESSIONAL ENGINEER

AIP 3-50-0015-34

VERMONT AGENCY OF TRANSPORTATION

URS
URS CORPORATION
3 CORPORATE DRIVE, SUITE 203
CLIFTON PARK, NY 12065
(518) 688-0015

PROJECT NAME: RUTLAND SOUTHERN VERMONT REGIONAL AIRPORT
CLARENDON, VERMONT
PROJECT NUMBER: AV14-8018-300

FILE NAME: z07h124pro_drn.dgn
PROJECT LEADER: F. WALSH
DESIGNED BY: G. D'AMICO
DRAINAGE PROFILES

PLOT DATE: 6/2/2013
DRAWN BY: M. KEMP
CHECKED BY:
SHEET 16 OF 36

PROJECT RECORD DRAWINGS

6/2/2013
P:\CADD\Consultants\z07h124pro_drn.dgn

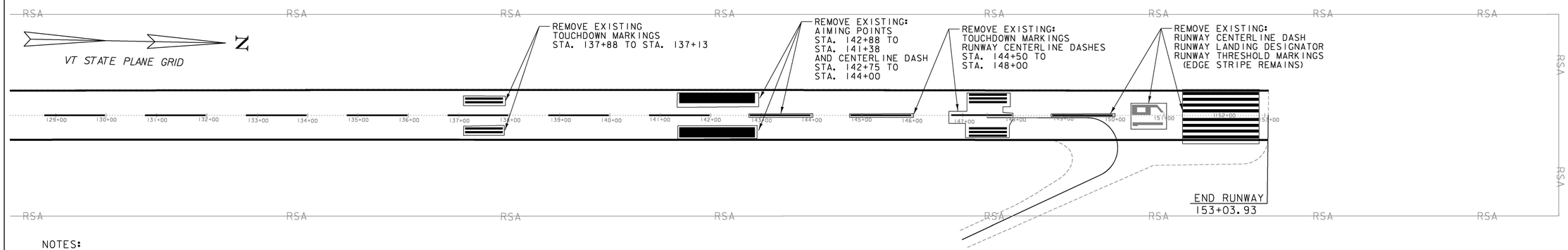

NOTES:
1. PHASE 2BEXISTING MARKINGS TO BE REMOVED USING EITHER WATERBLAST OR CHEMICAL REMOVAL.
2. REMOVAL OF PAVEMENT MARKINGS TO BE PAID FOR UNDER P-620-5.3.

EXISTING MARKINGS

0 100 200
SCALE IN FEET

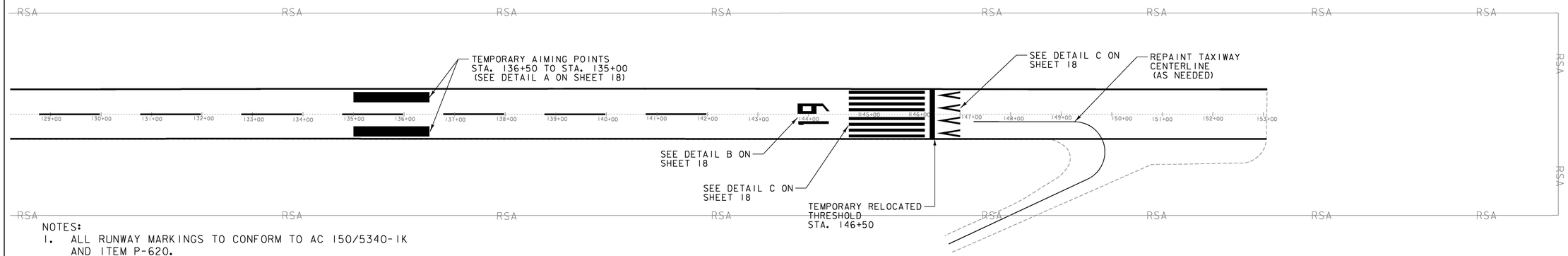

NOTES:
1. ALL RUNWAY MARKINGS TO CONFORM TO AC 150/5340-1K AND ITEM P-620.
2. TEMPORARY DISPLACED THRESHOLD MARKINGS AND AIMING POINTS TO BE WHITE AND OUTLINED WITH 6" BLACK.
3. TAXIWAY CENTERLINE TO BE YELLOW AND OUTLINED WITH 6" BLACK.
4. CONTRACTOR RESPONSIBLE FOR ALL LAYOUT.

TEMPORARY DISPLACED THRESHOLD MARKINGS
ITEM P-620-5.1

0 100 200
SCALE IN FEET

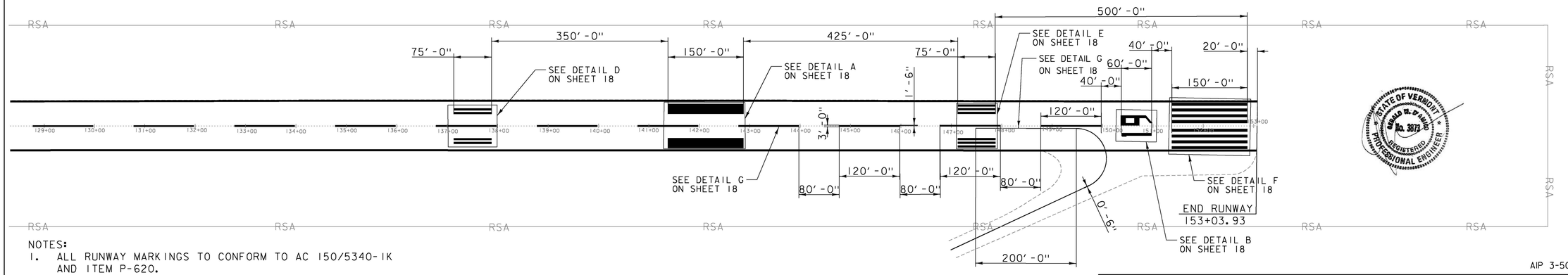

NOTES:
1. ALL RUNWAY MARKINGS TO CONFORM TO AC 150/5340-1K AND ITEM P-620.
2. ALL TEMPORARY DISPLACED THRESHOLD MARKINGS AND AIMING POINTS TO BE REMOVED COMPLETELY USING EITHER WATERBLASING OR CHEMICAL REMOVAL.
3. REMOVAL OF DISPLACED THRESHOLD MARKINGS AND AIMING POINTS TO BE PAID FOR UNDER ITEM P-620-5.3.
4. ALL RUNWAY MARKINGS TO BE WHITE AND OUTLINED WITH 6" BLACK.
5. TAXIWAY CENTERLINE AND LEAD-IN LINE TO BE YELLOW AND OUTLINED WITH 6" BLACK.
6. CONTRACTOR RESPONSIBLE FOR ALL LAYOUT.

FINAL MARKINGS
ITEM P-620-5.2

0 100 200
SCALE IN FEET

HAROLD W. D'AMICO
No. 3873
REGISTERED PROFESSIONAL ENGINEER
STATE OF VERMONT

AIP 3-50-0015-34

VERMONT AGENCY OF TRANSPORTATION

URS
URS CORPORATION
3 CORPORATE DRIVE, SUITE 203
CLIFTON PARK, NY 12065
(518) 688-0015

PROJECT NAME: RUTLAND SOUTHERN VERMONT REGIONAL AIRPORT
CLARENDON, VERMONT
PROJECT NUMBER: AV14-8018-300

FILE NAME: z07h124smp_rwy.dgn
PROJECT LEADER: F. WALSH
DESIGNED BY: G. D'AMICO
RUNWAY MARKING PLAN

PLOT DATE: 6/2/2013
DRAWN BY: M. WASSON
CHECKED BY:
SHEET 17 OF 36

6/2/2013
P:\CADD\Consultants\z07h124smp_rwy.dgn

PROJECT RECORD DRAWINGS

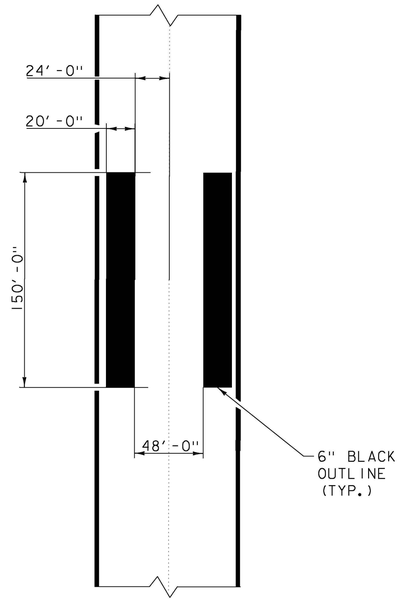

DETAIL A
AIMING POINT

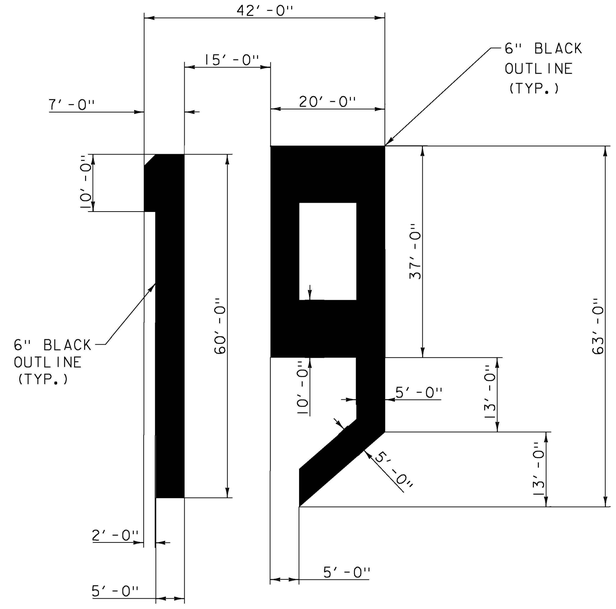

DETAIL B
LANDING INDICATOR

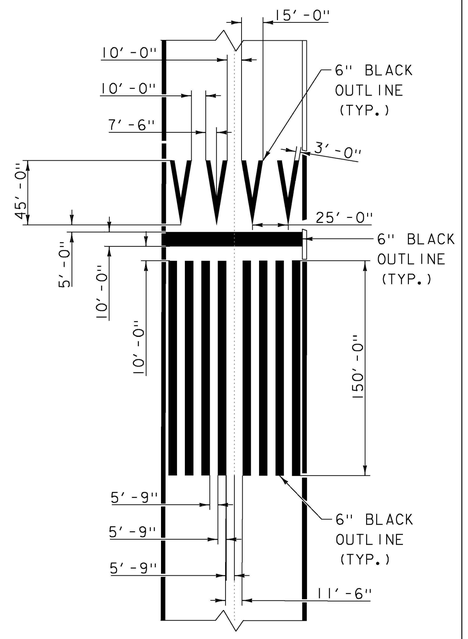

DETAIL C
DISPLACED THRESHOLD

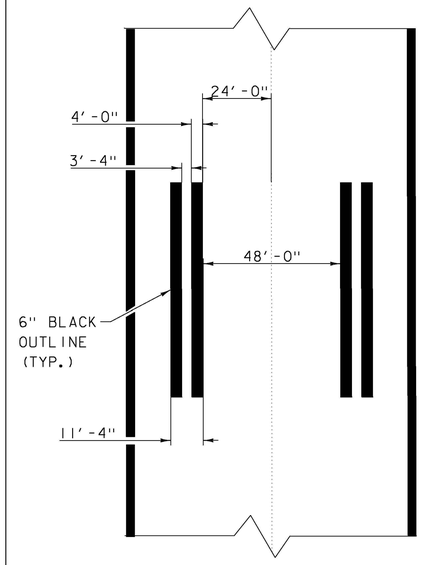

DETAIL D
TOUCHDOWN MARKINGS (II)

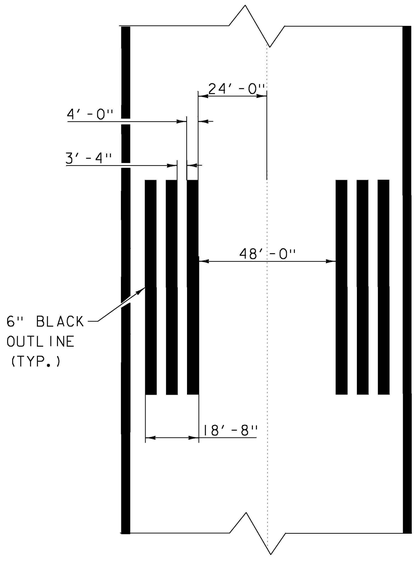

DETAIL E
TOUCHDOWN MARKINGS (III)

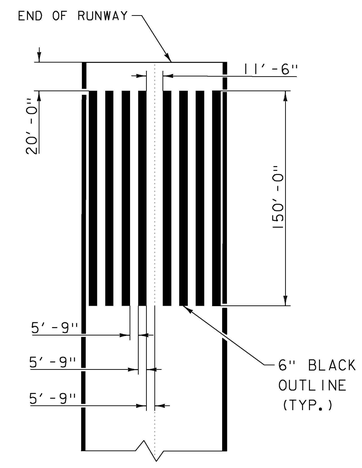

DETAIL F
THRESHOLD MARKING

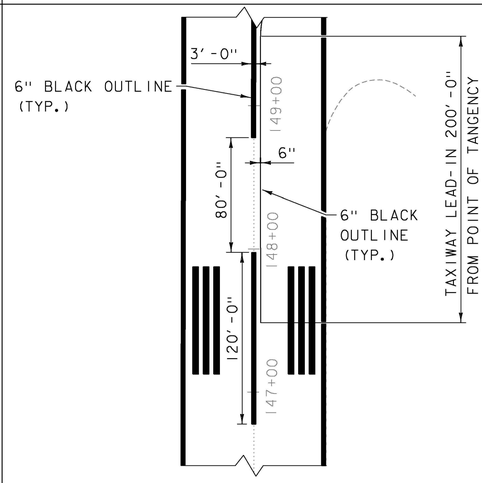

DETAIL G
CENTERLINE STRIPE AND
TAXIWAY LEAD-IN

NOTES
1. CONTRACTOR RESPONSIBLE FOR ALL LAYOUT.
2. ALL RUNWAY MARKINGS TO BE WHITE AND OUTLINED WITH 6" BLACK.
3. ALL TAXIWAY MARKINGS TO BE YELLOW AND OUTLINED WITH 6" BLACK.

REFERENCE:
FAA AC 150/5340-1K



AIP 3-50-0015-34

VERMONT AGENCY OF TRANSPORTATION

URS
URS CORPORATION
3 CORPORATE DRIVE, SUITE 203
CLIFTON PARK, NY 12065
(518) 688-0015

PROJECT NAME: RUTLAND SOUTHERN VERMONT REGIONAL AIRPORT
CLARENDON, VERMONT
PROJECT NUMBER: AV14-8018-300

FILE NAME: z07hl24detail_rwysmp.dgn PLOT DATE: 6/2/2013
PROJECT LEADER: F. WALSH DRAWN BY: M. WASSON
DESIGNED BY: G. D'AMICO CHECKED BY:
RUNWAY MARKING PLAN - DETAILS SHEET 18 OF 36

6/2/2013
P:\CADD\Consultants\z07hl24detail_rwysmp.dgn

PROJECT RECORD DRAWINGS

Record Drawings
Work completed in general conformance with contract plans.

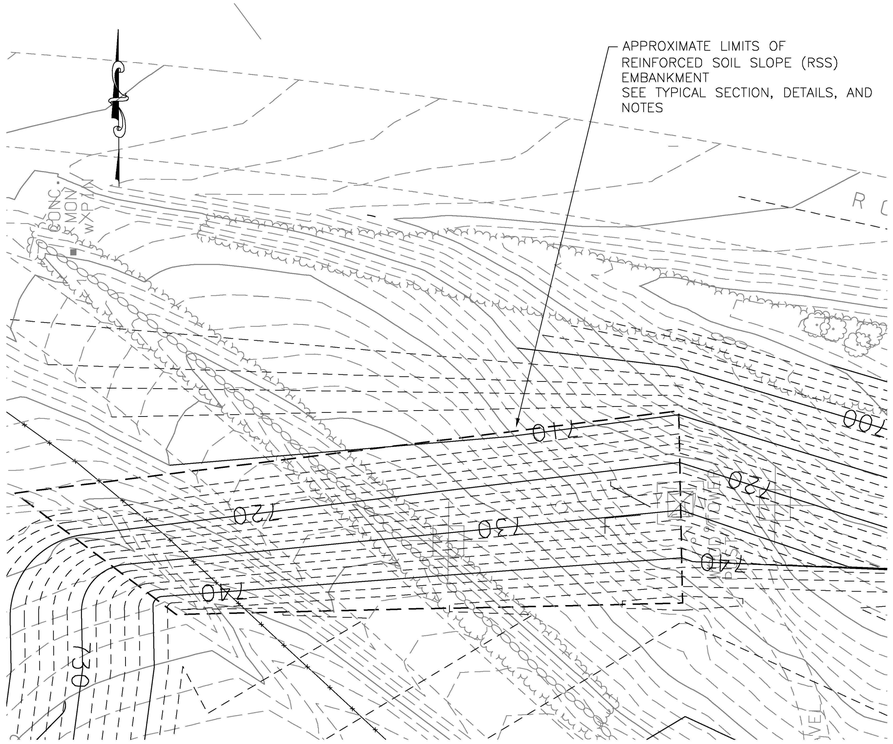

RSS PLAN
SCALE: 1"=60'

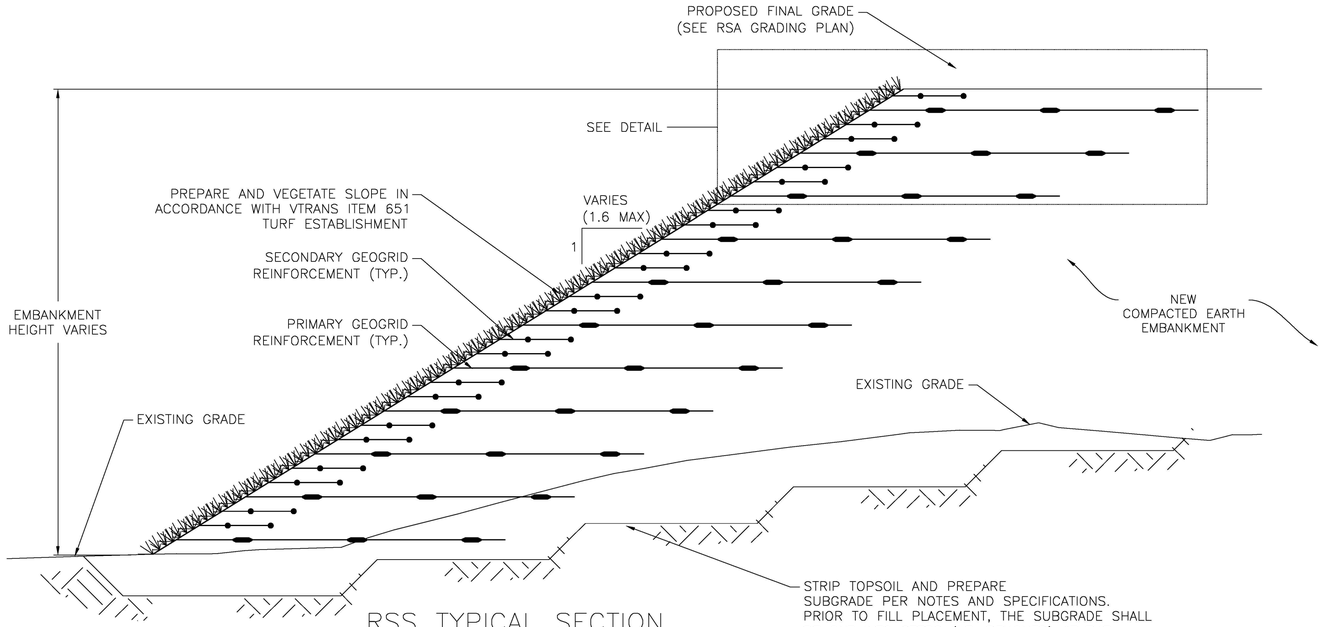

RSS TYPICAL SECTION
SCALE: 1"=10'

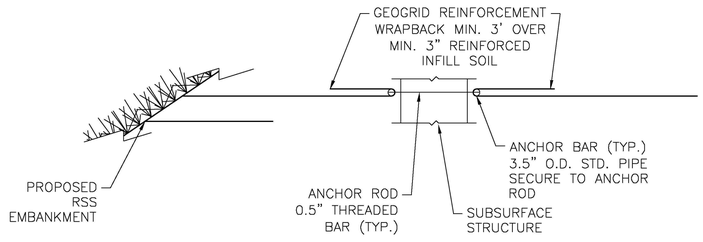

SUBSURFACE STRUCTURE DETAIL
SCALE: NONE

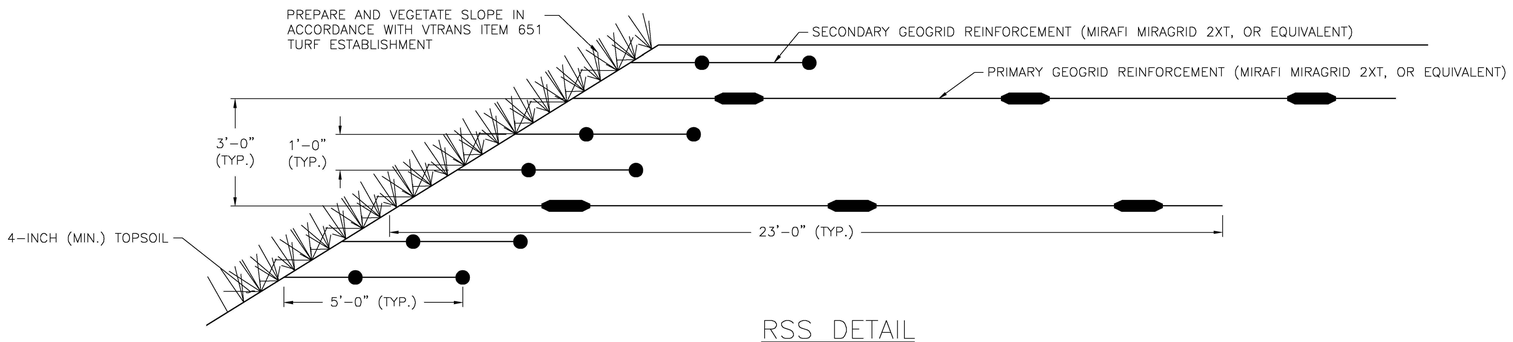

RSS DETAIL
SCALE: 1"=4'

AIP 3-50-0015-34

VERMONT AGENCY OF TRANSPORTATION

STATE OF VERMONT JOSEPH W. ROSS NO. 8555 CIVIL LICENSED PROFESSIONAL ENGINEER

GEODESIGN INCORPORATED
Geotechnical | Construction | Environmental
Engineers and Scientists

DRAWING NO. 1
SHEET 1 OF 2
PROJECT NO. 0880-011.5

URS
URS CORPORATION
3 CORPORATE DRIVE, SUITE 203
CLIFTON PARK, NY 12065
(518) 688-0015

PROJECT NAME: RUTLAND SOUTHERN VERMONT REGIONAL AIRPORT
CLARENDON, VERMONT
PROJECT NUMBER: AV14-8018-300

FILE NAME: z07hl24details_rss.dgn
PROJECT LEADER: ULF
DESIGNED BY: RPJ
RSS PLAN, TYPICAL SECTIONS & DETAILS
PLOT DATE: 6/2/2013
DRAWN BY: RPJ / JDG
CHECKED BY: JWK / JAG
SHEET 19 OF 36

6/2/2013
P:\CADD\Consultants\z07hl24details_rss.dgn

PROJECT RECORD DRAWINGS

Record Drawings
Work completed in general conformance with contract plans.

GENERAL NOTES

1. THE REINFORCED SOIL SLOPE (RSS) EMBANKMENT DESIGN WAS BASED ON THE EXISTING GRADING PLAN PROVIDED BY URS ON NOV 14, 2012, PROPOSED GRADING PLAN PROVIDED BY URS ON MAY 30, 2013, AND THE SUBSURFACE EXPLORATION AND LABORATORY TESTING DATA PROVIDED IN GEODESIGN, INC.'S REPORT, DATED FEBRUARY 2012.
2. DESIGN AND CONSTRUCTION GUIDELINES WERE BASED ON FHWA-NHI-00-043, MECHANICALLY STABILIZED EARTH WALLS AND REINFORCED SOIL SLOPES DESIGN AND CONSTRUCTION GUIDELINES, DATED MARCH 2001.
3. THE DESIGN PRESENTED HEREIN IS BASED ON THE SOIL PARAMETERS, FOUNDATION CONDITIONS, GROUNDWATER CONDITIONS, AND LOADINGS PRESENTED BELOW. IF THE ASSUMED PARAMETERS ARE NOT CONSISTENT WITH ACTUAL CONDITIONS. GEODESIGN, INC. SHALL BE NOTIFIED SO THAT THE DESIGN CAN BE UPDATED. THE CLIENT'S RESIDENT ENGINEER IS RESPONSIBLE FOR VERIFYING ACTUAL SITE CONDITIONS.
4. THE ENDS OF THE EMBANKMENT SHALL BE BLENDED INTO THE PROPOSED/EXISTING GRADES IN A MANNER SATISFACTORY TO THE CLIENT'S SITE REPRESENTATIVE.
5. TESTING METHODS, FREQUENCY AND VERIFICATION OF MATERIAL SPECIFICATIONS AND COMPACTION SHALL BE IN ACCORDANCE WITH FAA AC 150/5370-10D (ITEM P-152 EXCAVATION AND EMBANKMENT) AND IS THE RESPONSIBILITY OF THE CLIENT'S SITE REPRESENTATIVE.
6. TRACKED CONSTRUCTION EQUIPMENT SHALL NOT BE OPERATED DIRECTLY ON THE GEOGRID REINFORCEMENT. A MINIMUM FILL THICKNESS OF 6 INCHES IS REQUIRED FOR THE OPERATION OF TRACKED VEHICLES OVER THE REINFORCEMENT. TURNING OF TRACKED VEHICLES SHOULD BE AVOIDED TO PREVENT TRACKS FROM DISPLACING THE FILL AND REINFORCEMENT.
7. RUBBER TIRED VEHICLES MAY PASS OVER THE REINFORCEMENT AT SPEEDS LESS THAN 5 MPH. SUDDEN BRAKING AND SHARP TURNING SHALL BE AVOIDED.
8. AT THE END OF EACH DAY'S OPERATIONS, THE CONTRACTOR SHALL SHAPE THE LAST LIFT OF FILL TO MAINTAIN ADEQUATE DRAINAGE AND PREVENT PONDING. BACKFILL SHALL BE GRADED AWAY FROM THE SLOPE FACE.
9. CONSTRUCTION EQUIPMENT SHALL NOT COME WITHIN 5 FEET OF THE REINFORCED EMBANKMENT SIDE SLOPES.
10. NO CHANGES TO THE REINFORCEMENT LAYOUT; INCLUDING, BUT NOT LIMITED TO, LENGTH, REINFORCEMENT STRENGTH (TYPE), OR ELEVATION, SHALL BE MADE WITHOUT THE EXPLICIT WRITTEN CONSENT OF GEODESIGN, INC. IF CONDITIONS ARE DIFFERENT THAN THOSE STATED IN THESE DRAWINGS AND/OR IN THE PROJECT DOCUMENTS, THE CONTRACTOR MUST CONTACT GEODESIGN, INC. PRIOR TO PROCEEDING WITH CONSTRUCTION.
11. RSS EMBANKMENT HEIGHTS SHALL NOT EXCEED 39 FEET WITHOUT PRIOR WRITTEN CONSENT FROM GEODESIGN, INC.

DESIGN PARAMETERS

1. THE DESIGN OF THE RSS EMBANKMENT IS BASED ON THE FOLLOWING SOIL AND ROCK PROPERTIES:
   a. REINFORCED FILL (SELECT BORROW MATERIAL)
      FRICTION ANGLE = 32°
      COHESION = 0 PSF
      MOIST UNIT WEIGHT = 121 PCF
   b. FOUNDATION (SILTY GRAVELLY SAND)
      FRICTION ANGLE = 33°
      COHESION = 0 PSF
      MOIST UNIT WEIGHT = 125 PCF
2. THE DESIGN OF THE RSS EMBANKMENT IS BASED ON THE FOLLOWING MINIMUM SAFETY FACTORS (PER FHWA):
   a. STATIC GLOBAL STABILITY = 1.3
   b. SEISMIC GLOBAL STABILITY = 1.1
   c. SLIDING = 1.3
   d. INTERNAL PULLOUT = 1.5
3. THE DESIGN OF THE REINFORCED EMBANKMENT IS BASED ON THE FOLLOWING LOADS:
   a. TEMPORARY CONSTRUCTION AND MAINTENANCE EQUIPMENT SURCHARGE = 150 PSF
   b. HYDROSTATIC FORCES = NONE (GROUNDWATER BELOW FOUNDATION ELEVATION)
   c. SEISMIC FORCES = 0.08G

MATERIALS

1. SELECT BORROW MATERIAL SHALL BE A GRANULAR SOIL AS DESCRIBED IN THE TABLE AND NOTES ON DRAWING SHEET 6.
2. TOPSOIL SHALL MEET THE REQUIREMENTS OF VTRANS ITEM 651 AND INSTALLED AS SHOWN ON THESE DRAWINGS. THE TOPSOIL SHALL BE SALVAGED FROM STRIPPING OR OTHER GRADING OPERATIONS.
3. CONTRACTOR SHALL FURNISH AND INSTALL GEOGRID REINFORCEMENT SIMILAR TO MIRAFI MIRAGRID 2XT REINFORCEMENT GEOGRID OR EQUIVALENT.
4. PRIOR TO COMMENCING CONSTRUCTION OF THE RSS, THE CONTRACTOR SHALL PROVIDE SUBMITTALS FOR THE MATERIALS INTENDED FOR USE TO THE ENGINEER FOR APPROVAL.

TECHNICAL REQUIREMENTS

1. THE PROPOSED REINFORCED EMBANKMENT SHALL BEAR ON NATURAL, GRANULAR SOILS OR BEDROCK. ALL VEGETATION, SOIL, LARGE STONES, AND OTHER DEBRIS SHALL BE STRIPPED OR EXCAVATED FROM THE EMBANKMENT AREA PRIOR TO CONSTRUCTION (IN ACCORDANCE WITH ITEM P-152 EXCAVATION AND EMBANKMENT IN FAA AC 150/5370-10D). GEODESIGN, INC. SHALL EVALUATE THE SUBGRADE PRIOR TO CONSTRUCTING THE RSS EMBANKMENT. THE SUBGRADE SHALL BE CUT INTO STEPS AS SHOWN ON THE RSS TYPICAL SECTION AND AT THE DIRECTION OF THE GEOTECHNICAL ENGINEER.
2. THE BACKFILL AREA FOR EACH REINFORCEMENT ELEVATION SHALL BE LEVEL BEFORE PLACING GEOGRID REINFORCEMENT. UP TO 12 INCHES OF COMPACTED FILL MAY BE PLACED OVER THE SUBGRADE TO CREATE A LEVEL AREA PRIOR TO PLACING THE FIRST (LOWEST) LAYER OF GEOGRID REINFORCEMENT.
3. FILL SHALL BE PLACED IN MAXIMUM 12-INCH THICK LOOSE LIFTS. LIFTS SHALL BE COMPACT TO 95% OF THE MAXIMUM DENSITY AS DETERMINED BY ASTM D1557. FIELD DENSITY TESTS SHALL BE PERFORMED AS THE EMBANKMENT IS CONSTRUCTED. THE MINIMUM NUMBER OF TESTS SHALL BE DETERMINED BY THE CLIENT'S SITE REPRESENTATIVE.
4. WHEN PLACING FILL MATERIALS, ONLY HAND TAMP OR VIBRATORY PLATE COMPACTORS ARE PERMITTED WITHIN 4 FEET OF THE EDGE OF THE EMBANKMENT AND NOTHING LARGER THAN A DOUBLE-DRUM OR WALK-BEHIND COMPACTOR MAY BE USED ELSEWHERE.
5. THE GEOGRID REINFORCEMENT SHALL CONSIST OF MIRAFI MIRAGRID 2XT (OR EQUIVALENT) FOR BOTH PRIMARY AND SECONDARY REINFORCEMENT.
6. THE LENGTHS OF SHOWN GEOGRID REINFORCEMENT ARE THE MINIMUM LENGTHS TO BE USED FOR THE EMBANKMENT. THE CONTRACTOR MAY USE LONGER LENGTHS TO EASE INSTALLATION.
7. GEOGRID REINFORCEMENT LENGTHS ARE MEASURED PERPENDICULAR FROM THE EDGE OF THE EMBANKMENT.
8. ORIENTATION (ROLL DIRECTION) OF THE GEOGRID REINFORCEMENT SHALL BE IN ACCORDANCE WITH THE MANUFACTURER'S RECOMMENDATIONS AND VERIFIED BY THE CLIENT'S SITE REPRESENTATIVE.
9. GEOGRID SHALL BE IN TENSION AND FREE OF WRINKLES PRIOR TO PLACEMENT OF FILL. NORMAL TENSION SHALL BE APPLIED TO THE GEOGRID REINFORCEMENT AND SECURED IN PLACE WITH STAPLES, STAKES, OR HAND TENSIONING UNTIL THE GEOGRID REINFORCEMENT IS COVERED BY AT LEAST 6-INCHES OF FILL.
10. THE REINFORCED EMBANKMENT AND SIDE SLOPES SHALL BE SEEDED, MULCHED AND FERTILIZED IN ACCORDANCE WITH REQUIREMENTS OF THE PROJECT PLANS AND SPECIFICATIONS.
11. THERE ARE SUBSURFACE UTILITIES THAT MAY BE INSTALLED WITHIN THE GEOGRID REINFORCED ZONE OF THE RSS EMBANKMENT. WE RECOMMEND THESE STRUCTURES BE INSTALLED AS THE EMBANKMENT IS CONSTRUCTED. A STRUCTURAL FRAME SHALL BE INSTALLED AROUND THE STRUCTURE WHICH IS CAPABLE OF CARRYING THE LOAD FROM THE GEOGRID REINFORCEMENTS IN FRONT OF THE STRUCTURE TO THE GEOGRID REINFORCEMENT CONNECTED TO THE STRUCTURAL FRAME BEHIND THE STRUCTURE. SEE DETAIL ON SHEET 19. ALTERNATIVELY, WITH THE APPROVAL OF THE ENGINEER, THE STRUCTURE CAN BE RELOCATED OUTSIDE THE GEOGRID REINFORCED ZONE OF THE EMBANKMENT.



AIP 3-50-0015-34

GEODESIGN INCORPORATED
Geotechnical | Construction | Environmental
Engineers and Scientists
54 MAIN STREET- P.O. BOX 699 WINDSOR, VERMONT 05089-0699
TELEPHONE: 802.674.2033 • FACSIMILE: 802.674.5943

DRAWING NO. 2
SHEET 2 OF 2

PROJECT NO. 0880-011.01

VERMONT AGENCY OF TRANSPORTATION

URS
URS CORPORATION
3 CORPORATE DRIVE, SUITE 203
CLIFTON PARK, NY 12065
(518) 688-0015

PROJECT NAME: RUTLAND SOUTHERN VERMONT REGIONAL AIRPORT
CLARENDON, VERMONT
PROJECT NUMBER: AV14-8018-300

FILE NAME: z07h124NOTES_rss.dgn
PROJECT LEADER: ULF
DESIGNED BY: RPJ
RSS NOTES

PLOT DATE: 6/2/2013
DRAWN BY: RPJ / JDG
CHECKED BY: JWK / JAG
SHEET 20 OF 36

PROJECT RECORD DRAWINGS

6/2/2013
P:\CADD\Consultants\z07h124NOTES_rss.dgn

GENERAL NOTES:

1. THE RETAINING WALL DESIGN WAS BASED ON THE EXISTING AND PROPOSED GRADING PLAN PROVIDED BY URS ON MAY 30, 2013, AND THE SUBSURFACE EXPLORATION AND LABORATORY TESTING DATA PROVIDED IN GEODESIGN, INC.'S REPORT, DATED FEBRUARY 2012. DESIGN AND CONSTRUCTION GUIDELINES WERE BASED ON FHWA-NHI-00-043, MECHANICALLY STABILIZED EARTH WALLS AND REINFORCED SOIL SLOPES DESIGN AND CONSTRUCTION GUIDELINES, DATED MARCH 2001. THE DESIGN HEREIN IS BASED UPON INFORMATION PROVIDED BY THE REFERENCE DOCUMENTS. ON THE BASIS OF THIS INFORMATION, GEODESIGN HAS DESIGNED THE INTERNAL STABILITY AND EXTERNAL STABILITY INCLUDING FOUNDATION AND SLOPE STABILITY. REMOVE ALL VEGETATION, ORGANIC SOILS AND UNSUITABLE FILL SOILS FROM THE WALL AND GRID ALIGNMENT AREAS. BENCH CUT ALL EXCAVATED SLOPES.

2. THE GEOTECHNICAL ENGINEER SHALL VERIFY EXISTING SITE CONDITIONS AND THAT FOUNDATION SOILS SATISFY THE DESIGN STANDARDS AND PARAMETERS SHOWN ON THE PROJECT DOCUMENTS. THE GEOTECHNICAL ENGINEER SHALL VERIFY ALLOWABLE BEARING CAPACITY OF SOILS OF 5 KSF. DO NOT OVEREXCAVATE UNLESS DIRECTED TO DO SO BY THE GEOTECHNICAL ENGINEER IN ORDER TO REMOVE UNSUITABLE SOIL. IF OVEREXCAVATING IN ORDER TO IMPROVE BEARING CAPACITY, THE EXCAVATION SHALL EXTEND AT 1H:1V (FROM THE WALL BASE UNIT) IN FRONT OF THE WALL FACE AND THE FULL WIDTH OF THE DRAINAGE LAYER BEHIND THE WALL.

3. FOUNDATION SOIL SHALL BE PROOF COMPACTED AND INSPECTED BY THE GEOTECHNICAL ENGINER PRIOR TO PLACEMENT OF LEVELING PAD.

4. THE LEVELING PAD SHALL BE A MINIMUM OF 9 INCHES THICK AND 60 INCHES WIDE AND CONSIST OF EITHER 1.5 INCH CRUSHED STONE (VTRANS ITEM 704.02C) OR UNREINFORCED LEAN CONCRETE (f'c = 300 PSI).

5. MINIMUM EMBEDMENT OF THE RETAINING WALL BELOW FINISHED GRADE VARIES AND SHALL BE AS INDICATED ON THE DEVELOPED ELEVATION ON DRAWING RW-3 AND RW-4 AND THE TYPICAL SECTION ON DRAWING RW-5. MAXIMUM HEIGHT ABOVE LEVELING PAD SHALL BE APPROXIMATELY 39 FEET.

6. FOLLOW APPLICABLE PROVISIONS OF THE MANUFACTURER'S INSTALLATION AND WRITTEN SPECIFICATIONS, ESPECIALLY WITH REGARDS TO LEVELING BLOCKS AND BASE.

7. UNIT INFILL SHALL BE INSTALLED WITHIN EACH STONE STRONG UNIT. THIS MATERIAL SHALL BE CLEAN 3/4 INCH CRUSHED STONE (VTRANS ITEM 704.02B). SAND BORROW FOR GEOGRID REINFORCEMENT BACKFILL AND BACKFILL BELOW THE WALL AS SHOWN ON THESE DRAWINGS SHALL CONFORM TO THE REQUIREMENTS OF VTRANS ITEM 703.03. TOPSOIL SHALL MEET THE REQUIREMENTS OF VTRANS ITEM 651. THE TOPSOIL SHALL BE SALVAGED FROM STRIPPING OR OTHER GRADING OPERATIONS.

8. PROVIDE PERFORATED HDPE TILE DRAINS AT BASE OF THE FACE OF THE WALL AND A SOLID OUTLET PIPE TO DAYLIGHT THE SLOPE AT LOCATIONS DESIGNATED ON DRAWINGS RW-3 AND RW-4. ELEVATIONS WILL VARY.

9. PLACE AND COMPACT SAND BORROW BELOW AND BEHIND THE WALLS AS THE WALLS ARE INSTALLED. LIFTS SHALL NOT EXCEED 9 INCHES. FIELD DENSITY TESTS SHALL BE PERFORMED AS THE WALLS ARE INSTALLED. THE MINIMUM NUMBER OF TESTS SHALL BE DETERMINED BY THE CLIENT'S SITE REPRESENTATIVE. COMPACTION OF BACKFILL MATERIALS SHALL BE TO 95% OF MAXIMUM DENSITY AS DETERMINED BY ASTM D1557 AND IN ACCORDANCE WITH FAA AC150/5370-10D (ITEM P-152 EXCAVATION AND EMBANKMENT).

10. THE GEOGRID REINFORCEMENT SHALL MEET THE REQUIREMENTS SHOWN ON THE DRAWINGS AND IN ACCORDANCE WITH FAA AC 150/5370-10D (ITEM G-152 GEOGRID AND GEOTEXTILE). GEOGRID REINFORCEMENT SHALL BE LAID HORIZONTALLY ON THE COMPACTED RETAINING WALL FILL AND PLACED ON THE STONE STRONG UNITS AT THE ELEVATIONS AND TO THE LENGTHS SHOWN. CORRECT ORIENTATION (ROLL DIRECTION) OF THE GEOGRID REINFORCEMENT SHALL BE VERIFIED BY THE OWNER'S SITE REPRESENTATIVE TO BE IN ACCORDANCE WITH THE MANUFACTURER'S RECOMMENDATIONS. THE GEOGRID REINFORCEMENT SHALL BE IN TENSION AND FREE OF WRINKLES PRIOR TO PLACEMENT OF SOIL FILL ABOVE. NOMINAL TENSION SHALL BE APPLIED TO THE GEOGRID REINFORCEMENT AND SECURED IN PLACE UNTIL IT IS COVERED WITH AT LEAST 6 INCHES OF SOIL.

11. PROVIDE LATERAL DRAINAGE SWALES TO DIRECT FLOWS AROUND THE ENDS OF THE WALLS AND AWAY FROM THE WALL DURING CONSTRUCTION.

12. SOME ACCEPTABLE FORM OF SOIL EROSION PROTECTION SHOULD BE ESTABLISHED AT THE TOP OF THE WALL AS SOON AS THE WALL IS COMPLETED.

13. RECOMMENDED COMPACTION EQUIPMENT INCLUDES HAND TAMP OR VIBRATORY PLATE COMPACTOR WITHIN 4 FEET OF THE FACES OF THE WALL. AND NOTHING LARGER THAN A DOUBLE-DRUM OR WALK-BEHIND COMPACTOR GREATER THAN 4 FEET BEHIND THE WALL.

14. IF CONDITIONS ARE DIFFERENT THAN THOSE STATED IN THESE DRAWINGS AND/OR IN THE PROJECT DOCUMENTS, THE CONTRACTOR MUST CONTACT GEODESIGN PRIOR TO PROCEEDING WITH THE CONSTRUCTION.

15. AN APPLIED LIVE LOAD SURCHARGE OF 150 PSF HAS BEEN ASSUMED FOR THE DESIGN TO ACCOUNT FOR TEMPORARY CONSTRUCTION AND LANDSCAPE EQUIPMENT. IF THE ANTICIPATED SURCHARGE LOAD IS DIFFERENT, GEODESIGN MUST BE NOTIFIED SO THAT THE DESIGN CAN BE UPDATED.

16. THERE ARE PROPOSED SUBSURFACE UTILITIES THAT WILL BE INSTALLED WITHIN THE GEOGRID REINFORCED ZONE OF THE RETAINING WALL. WE RECOMMEND THESE STRUCTURES BE INSTALLED AS THE RETAINING WALL IS CONSTRUCTED. A STRUCTURAL FRAME SHALL BE INSTALLED AROUND THE STRUCTURE WHICH IS CAPABLE OF CARRYING THE LOAD FROM THE GEOGRID REINFORCEMENTS IN FRONT OF THE STRUCTURE TO THE GEOGRID REINFORCEMENT CONNECTED TO THE STRUCTURAL FRAME BEHIND THE STRUCTURE. SEE DETAIL ON DRAWING RW-5.

DESIGN ASSUMPTIONS	
RETAINING WALL UNIT INFILL	120 PCF
	Φ=35°
RETAINED SOIL	125 PCF
	Φ=34°
FOUNDATION SOIL	125 PCF
	Φ=34°
APPLIED SURCHARGE	150 PSF
MAXIMUM SLOPE BEHIND WALL	VARIES FROM NEAR LEVEL TO 3H:1V
MAXIMUM SLOPE AT TOE WALL	VARIES FROM LEVEL TO 2H:1V
SEISMIC ACCELERATION	N/A
FREE WATER IMMEDIATELY BEHIND WALL	NONE (DRAINAGE PROVIDED)

NOTES:

1. CARE SHOULD BE TAKEN TO REMOVE ALL ORGANIC AND OR OTHER DELETERIOUS MATERIAL FROM THE BASE OF THE EXCAVATION FOR THE RETAINING WALL.

2. THE ENDS OF THE RETAINING WALL ARE TO BE BLENDED INTO THE EXISTING GRADES IN A MANNER SATISFACTORY TO THE OWNER'S SITE REPRESENTATIVE.

3. THE LENGTHS OF GEOGRID REINFORCEMENT SHOWN ON DRAWINGS RW-3 AND RW-4 ARE THE MINIMUM LENGTHS TO BE USED. GEOGRID REINFORCEMENT LENGTHS ARE MEASURED PERPENDICULAR FROM THE FRONT FACE OF THE WALL. ALL GEOGRID IS TO BE PLACED PERPENDICULAR TO THE WALL FACE.

4. FOR GEOGRID REINFORCEMENT OVERLAP AT CURVES, THE CONTRACTOR SHALL PLACE AT LEAST 3-INCHES OF FILL BETWEEN OVERLAPPING LAYERS.

5. FOR DRAINAGE PIPES WHICH OUTLET THROUGH THE FACE OF THE WALL, THE SPACE NEEDED TO SQUARE OFF THE PIPE TO THE WALL SHALL BE FILLED WITH NON-SHRINK MORTAR, BLOCKS CUT TO SIZE, OR OTHER APPROVED SEALANT METHOD TO PREVENT MIGRATION OF BACKFILL MATERIAL THROUGH GAPS AROUND THE PIPE.

6. A PROTECTIVE FENCE AND ANCHOR SYSTEM WILL BE INSTALLED AT THE TOP OF THE WALL AS SHOWN ON THE DRAWINGS THAT WILL BE WITHIN THE LENGTH OF THE GEOGRID REINFORCEMENT. FENCE AND ANCHOR POSTS SHALL BE LOCATED AT LEAST 5 INCHES BEYOND THE BACK FACE OF ANY BLOCK UNIT TO AVOID INTERFERENCE WITH THE BLOCKS DURING INSTALLATION. THE FOLLOWING PROCEDURE SHOULD BE FOLLOWED FOR POST INSTALLATION WHERE GEOGRID REINFORCEMENT IS LESS THAN 18 INCHES FROM THE SURFACE. EVALUATION OF THE STRUCTURAL CAPABILITIES OF ANY PROTECTIVE FENCE SYSTEM INSTALLED IS NOT PART OF THIS DESIGN.
   a. THE SOIL ABOVE THE FIRST GEOGRID REINFORCEMENT IS TO BE EXCAVATED AND THE GEOGRID REINFORCEMENT HAND CUT. THE HOLE CUT IS TO BE JUST LARGE ENOUGH FOR THE POST INSTALLATION. IF THE POST EXTENDS THROUGH FURTHER GEOGRID REINFORCEMENT LAYERS, IT MAY BE DRIVEN THROUGH ADDITIONAL LAYERS, PROVIDED THE DRIVEN END IS TAPERED IN SOME FORM TO PROVIDE A POINT. SQUARE-EDGE POSTS SHALL NOT BE DRIVEN THROUGH GEOGRID REINFORCEMENT LAYERS, DRIVING WOOD POSTS IN CLOSE PROXIMITY TO THE REAR OF THE WALL COULD PUSH THE WALL FACE OUTWARD DUE TO DISPLACED SOIL AND SHOULD NOT BE ALLOWED.
   b. AUGERING OF POST HOLES IS ACCEPTABLE, PROVIDED GEOGRID REINFORCEMENT LAYERS WITHIN 18 INCHES OF THE SURFACE ARE HAND-CUT PRIOR TO AUGERING THE HOLE.
   c. IF THE POSTS ARE TO BE SLEEVED AND SET IN CONCRETE, ALL GEOGRID REINFORCEMENT LAYERS MUST BE HAND CUT, WITH THE CUT HOLES JUST LARGE ENOUGH TO PROVIDE ROOM FOR THE SLEEVE. USE OF A HAND-OPERATED POST-HOLE SHOVEL TO CUT THROUGH GEOGRID REINFORCEMENT IS ACCEPTABLE FOR LAYERS DEEPER THAN 19 INCHES FROM THE SURFACE OR UTILITY LESS THAN OR EQUAL TO 6 INCHES IN DIAMETER.

SUGGESTED CONSTRUCTION SEQUENCE:

1. CLEAR ANY DEBRIS AND STRIP ALL VEGETATION, ORGANIC SOILS, AND UNSUITABLE FILL SOILS FROM THE RETAINING WALL AREA. BENCH CUT EXCAVATED SLOPES.

2. INSTALL EROSION CONTROL FENCE IN ACCORDANCE WITH APPROVED SOIL EROSION AND SEDIMENTATION CONTROL PLAN.

3. LAYOUT THE LOCATION OF THE PROPOSED LEVELING PAD AND RETAINING WALL. WHERE PROPOSED, CONSTRUCT THE LEVELING PAD PRIOR TO EXCAVATION FOR AND INSTALLING THE FIRST COURSE OF STONE STRONG UNITS.

4. THE RETAINING WALL FOUNDATION SOIL SHALL BE PROOF COMPACTED OR INSTALLED IN ACCORDANCE WITH THE DRAWINGS. THE CONTRACTOR SHALL REMOVE AND REPLACE UNSUITABLE SOILS AT THE DIRECTION OF THE OWNER'S SITE REPRESENTATIVE.

5. CONSTRUCT THE LEVELING PAD TO THE LINES AND GRADES SHOWN.

6. PLACE THE FIRST COURSE OF STONE STRONG UNITS DIRECTLY ON THE LEVELING PAD. THE UNITS SHALL BE LEVEL SIDE TO SIDE AND FRONT TO REAR. ENSURE THE UNITS ARE IN FULL CONTACT WITH THE BASE AND ANY ADJACENT UNITS, AND INSTALL DRAINAGE PIPE.

7. FILL ALL VOIDS BETWEEN AND WITHIN THE UNITS WITH UNIT INFILL.

8. INSTALL GEOGRID REINFORCEMENT AND PLACE THE NEXT COURSE OF STONE STRONG UNITS MAKING SURE THE ALIGNMENT PRODUCES A BATTER OF 4 INCHES EVERY 36 INCHES OF VERTICAL WALL HEIGHT.

9. FILL VOIDS BETWEEN AND WITHIN THE UNITS WITH UNIT FILL.

10. REPEAT STEPS 8 AND 9 FOR SUBSEQUENT COURSES.

11. INSTALL GEOTEXTILE FILTER FABRIC OVER TOP OF FINAL COURSE OF STONE STRONG UNITS, INSTALL DUAL FACE BLOCK, CORNER, AND CAP STONE UNITS, AND INSTALL SURFACE DRAINAGE AND FALL PROTECTION BARRIER IN ACCORDANCE WITH PROJECT REQUIREMENTS.

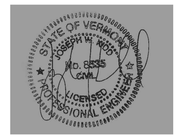

Record Drawings
Work completed in general conformance with contract plans.

AIP 3-50-0015-34

VERMONT AGENCY OF TRANSPORTATION

GEODESIGN INCORPORATED
Geotechnical | Construction | Environmental
Engineers and Scientists
54 MAIN STREET • WINDSOR, VT 05089
TELEPHONE: 802.674.2033 • FACSIMILE: 802.674.5943

DRAWING NO. RW-1
SHEET 1 OF 5

PROJECT NO. 0880-011.5

URS
URS CORPORATION
3 CORPORATE DRIVE, SUITE 203
CLIFTON PARK, NY 12065
(518) 688-0015

PROJECT NAME: RUTLAND SOUTHERN VERMONT REGIONAL AIRPORT
CLARENDON, VERMONT
PROJECT NUMBER: AV14-8018-300

FILE NAME: z07h124notes_wall.dgn
PROJECT LEADER: JWK
DESIGNED BY: RPJ
RETAINING WALL AND REINFORCED PAD NOTES

PLOT DATE: 6/2/2013
DRAWN BY: JPG / JPM
CHECKED BY: JAG
SHEET 21 OF 36

6/2/2013
P:\CADD\Consultants\z07h124notes_wall.dgn

PROJECT RECORD DRAWINGS

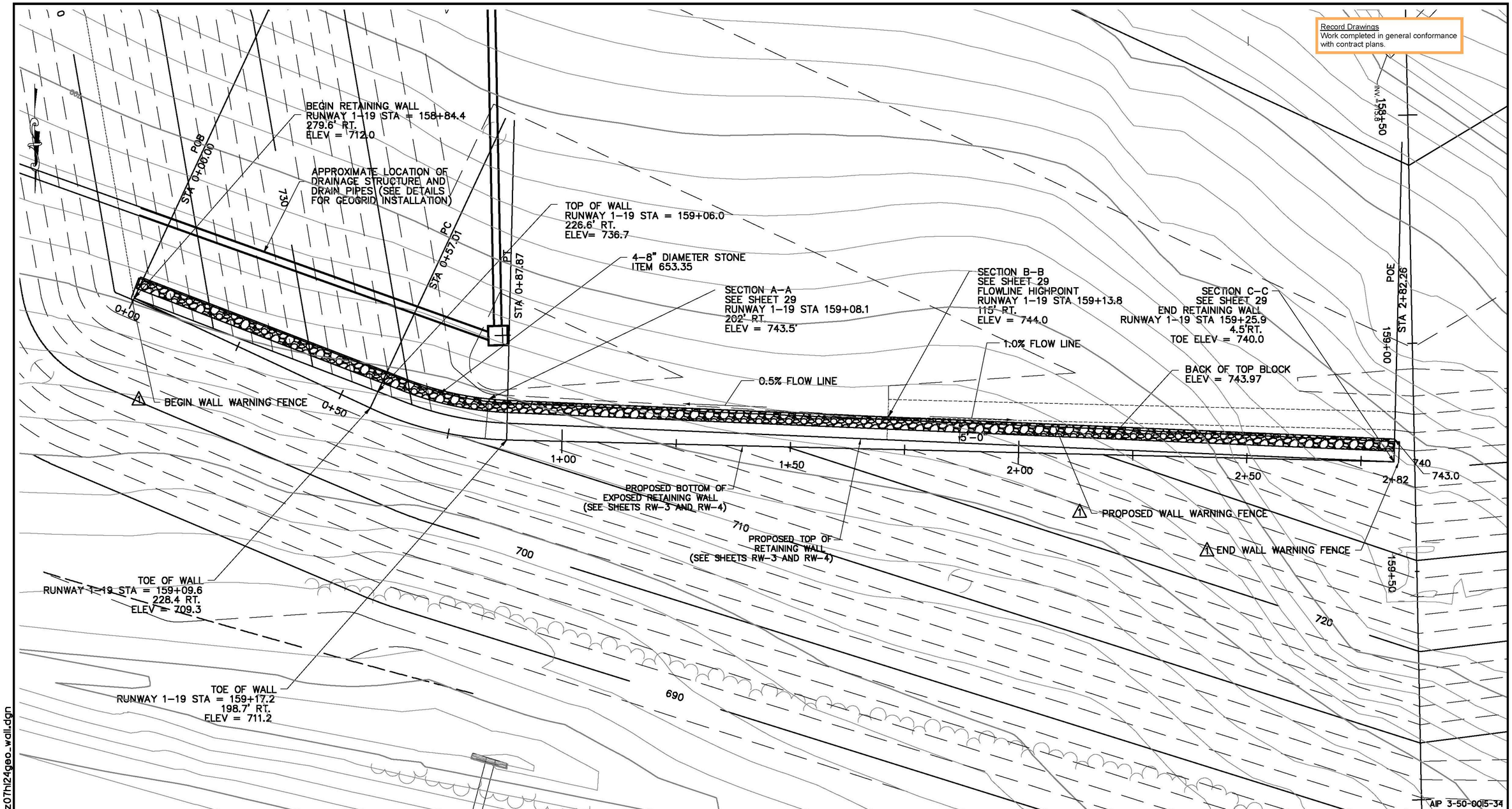

LEGEND

710	EXISTING CONTOUR W/ELEV.
	EXISTING INT. CONTOUR
710	PROPOSED CONTOUR W/ELEV.
	PROPOSED INT. CONTOUR
	EXISTING FENCE
	PROPOSED FENCE
RSA	RUNWAY SAFETY AREA

1 6/11/13 ADDENDUM 1

STATE OF VERMONT
JOSEPH W. WOOD
No. 8535
CIVIL
LICENSED PROFESSIONAL ENGINEER

0 10 20
SCALE IN FEET

GEODESIGN INCORPORATED
Geotechnical | Construction | Environmental
Engineers and Scientists
54 MAIN STREET · WINDSOR, VT 05089
TELEPHONE: 802.674.2033 · FACSIMILE: 802.674.5943

DRAWING NO. RW-2
SHEET 2 OF 5
PROJECT NO. 0880-011.5

VERMONT AGENCY OF TRANSPORTATION

URS
URS CORPORATION
3 CORPORATE DRIVE, SUITE 203
CLIFTON PARK, NY 12065
(518) 688-0015

PROJECT NAME: RUTLAND SOUTHERN VERMONT REGIONAL AIRPORT CLARENDON, VERMONT
PROJECT NUMBER: AV14-8018-300

FILE NAME: z07h124geo_wall.dgn
PROJECT LEADER: JWK
DESIGNED BY: RPJ
SEGMENTAL RETAINING WALL AND REINFORCED PAD PLAN
PLOT DATE: 6/11/13
DRAWN BY: JPG / JPM
CHECKED BY: JAG
SHEET 22 OF 36

6/12/2013
P:\CADD\Consultants\z07h124geo_wall.dgn

PROJECT RECORD DRAWINGS

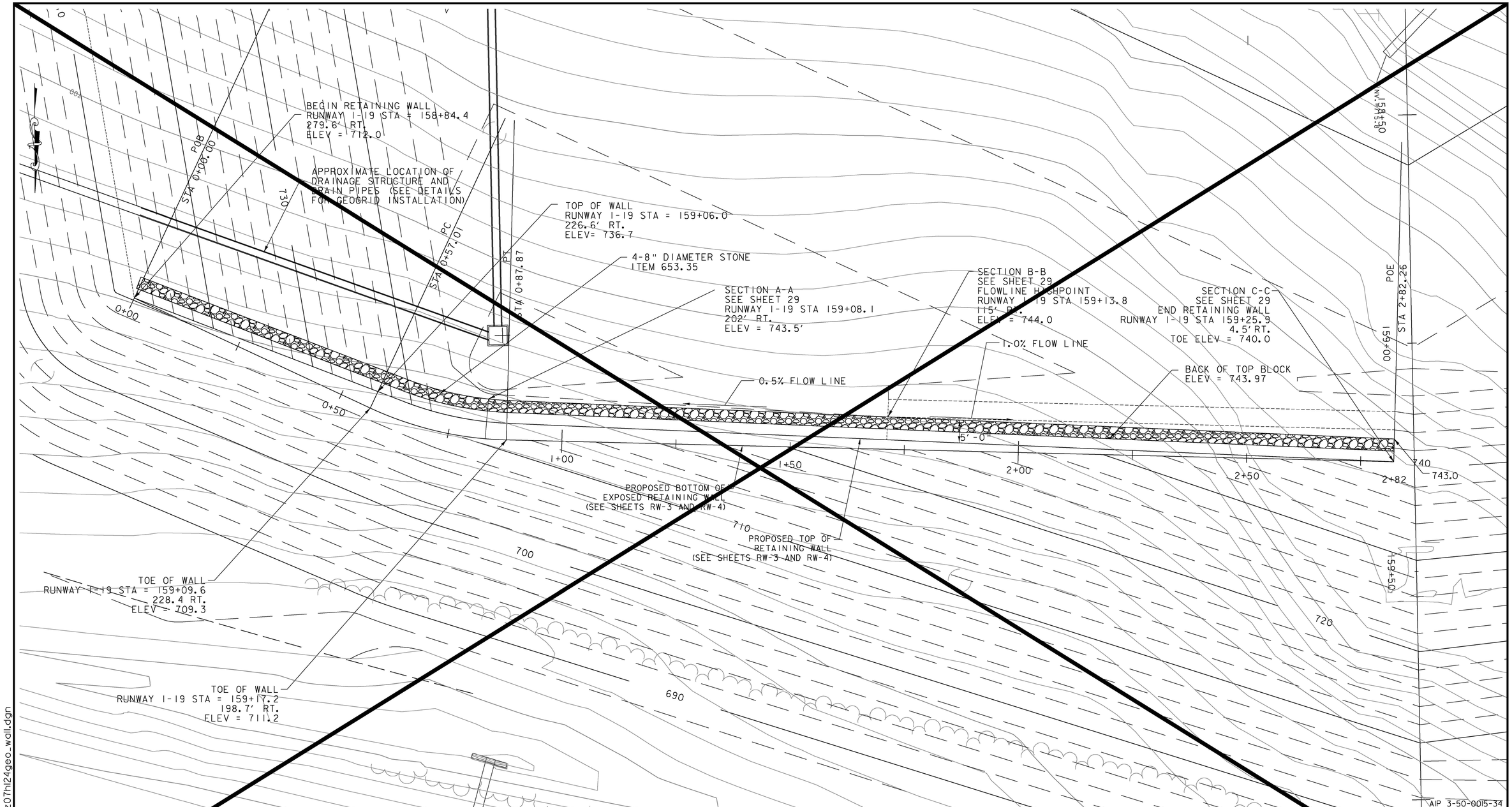

LEGEND

710	EXISTING CONTOUR W/ELEV.
	EXISTING INT. CONTOUR
710	PROPOSED CONTOUR W/ELEV.
	PROPOSED INT. CONTOUR
	EXISTING FENCE
	PROPOSED FENCE
RSA	RUNWAY SAFETY AREA

STATE OF VERMONT
JOSEPH W. HOD
No. 8535
CIVIL
LICENSED
PROFESSIONAL ENGINEER

0 10 20
SCALE IN FEET

GEODESIGN INCORPORATED
Geotechnical | Construction | Environmental
Engineers and Scientists
54 MAIN STREET • WINDSOR, VT 05089
TELEPHONE: 802.674.2033 • FACSIMILE: 802.674.5943

DRAWING NO. RW-2
SHEET 2 OF 5

PROJECT NO. 0880-011.5

VERMONT AGENCY OF TRANSPORTATION

URS
URS CORPORATION
3 CORPORATE DRIVE, SUITE 203
CLIFTON PARK, NY 12065
(518) 688-0015

PROJECT NAME: RUTLAND SOUTHERN VERMONT REGIONAL AIRPORT
CLARENDON, VERMONT
PROJECT NUMBER: AV14-8018-300

FILE NAME: z07h124geo_wall.dgn
PROJECT LEADER: JWK
DESIGNED BY: RPJ
SEGMENTAL RETAINING WALL AND REINFORCED PAD PLAN

PLOT DATE: 6/2/2013
DRAWN BY: JPG / JPM
CHECKED BY: JAG
SHEET 22 OF 36

6/2/2013
P:\CADD\Consultants\z07h124geo_wall.dgn

PROJECT RECORD DRAWINGS

Record Drawings
Work completed in general conformance with contract plans.

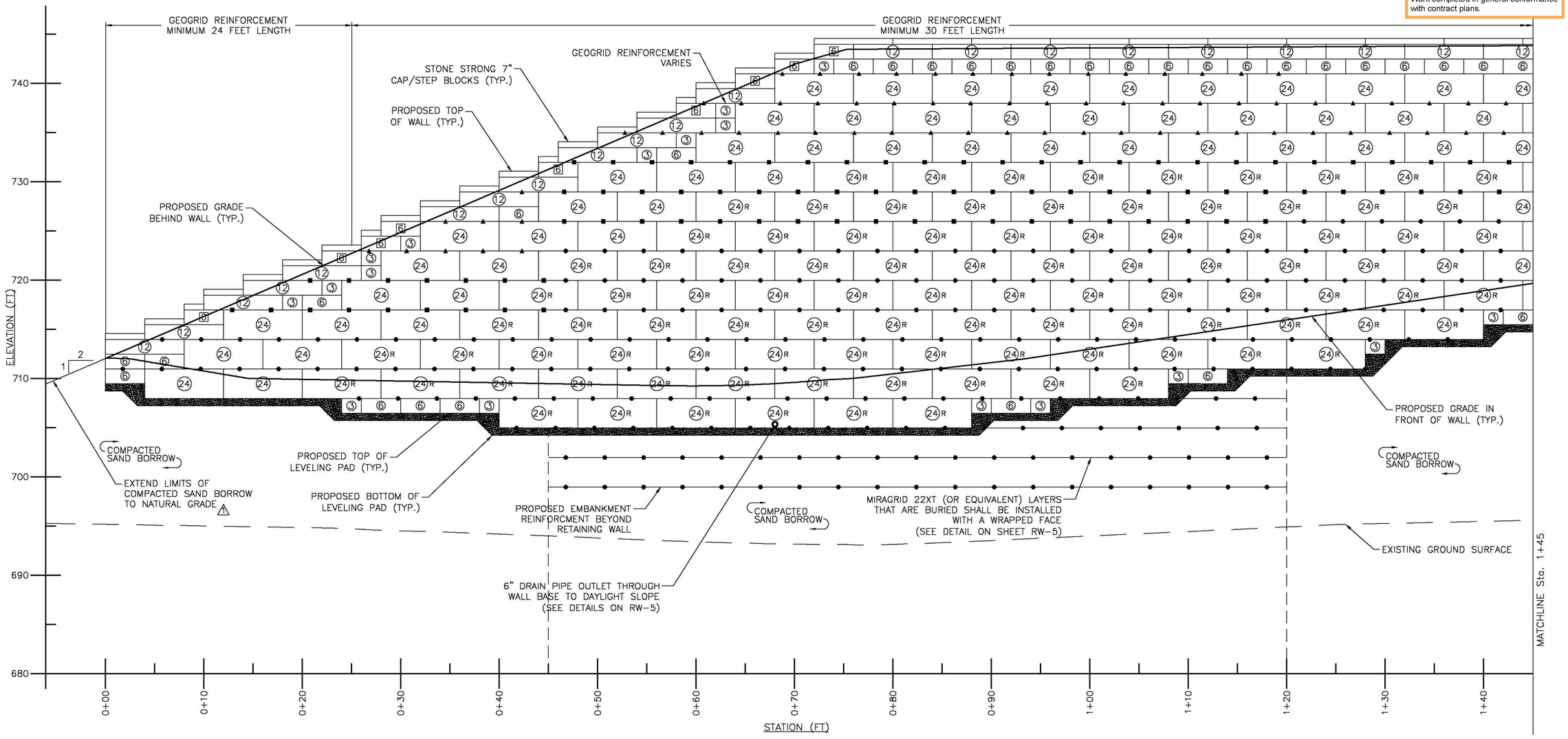

LEGEND:

MIRAGRID 5XT (OR EQUIVALENT)	(24) STONE STRONG 24 SF UNIT	(12) STONE STRONG 12 SF UNIT DUAL FACE BLOCK
MIRAGRID 10XT (OR EQUIVALENT)	(24R) REINFORCED STONE STRONG 24 SF UNIT	[6] STONE STRONG 6 SF UNIT HALF 12 SF DUAL FACE BLOCK
MIRAGRID 22XT (OR EQUIVALENT)	(6) STONE STRONG 6 SF UNIT	(3) STONE STRONG 3 SF UNIT

NO.	DATE		DRWN	CHKD	APPVD
⚠1	6/11	DESIGN ADDENDUM 1	RPJ	JAG	JWK

REVISIONS

STATE OF VERMONT JOSEPH W. JAGO No. 8838 LICENSED PROFESSIONAL ENGINEER

0 5 10
SCALE IN FEET

GEODESIGN INCORPORATED
Geotechnical | Construction | Environmental Engineers and Scientists
54 MAIN STREET · WINDSOR, VT 05089
TELEPHONE: 802.674.2033 · FACSIMILE: 802.674.5943

DRAWING NO. RW-3
SHEET 3 OF 5
PROJECT NO. 0880-011.5

VERMONT AGENCY OF TRANSPORTATION

URS
URS CORPORATION
3 CORPORATE DRIVE, SUITE 203
CLIFTON PARK, NY 12065
(518) 688-0015

PROJECT NAME: RUTLAND SOUTHERN VERMONT REGIONAL AIRPORT CLARENDON, VERMONT
PROJECT NUMBER: AV14-8018-300

FILE NAME: z07h124pro_wall1.dgn
PROJECT LEADER: JWK
DESIGNED BY: RPJ
SEGMENTAL RETAINING WALL DEVELOPED ELEVATION 1
PLOT DATE: 6/11/13
DRAWN BY: JPG / JPM
CHECKED BY: JAG
SHEET 23 OF 36

PROJECT RECORD DRAWINGS

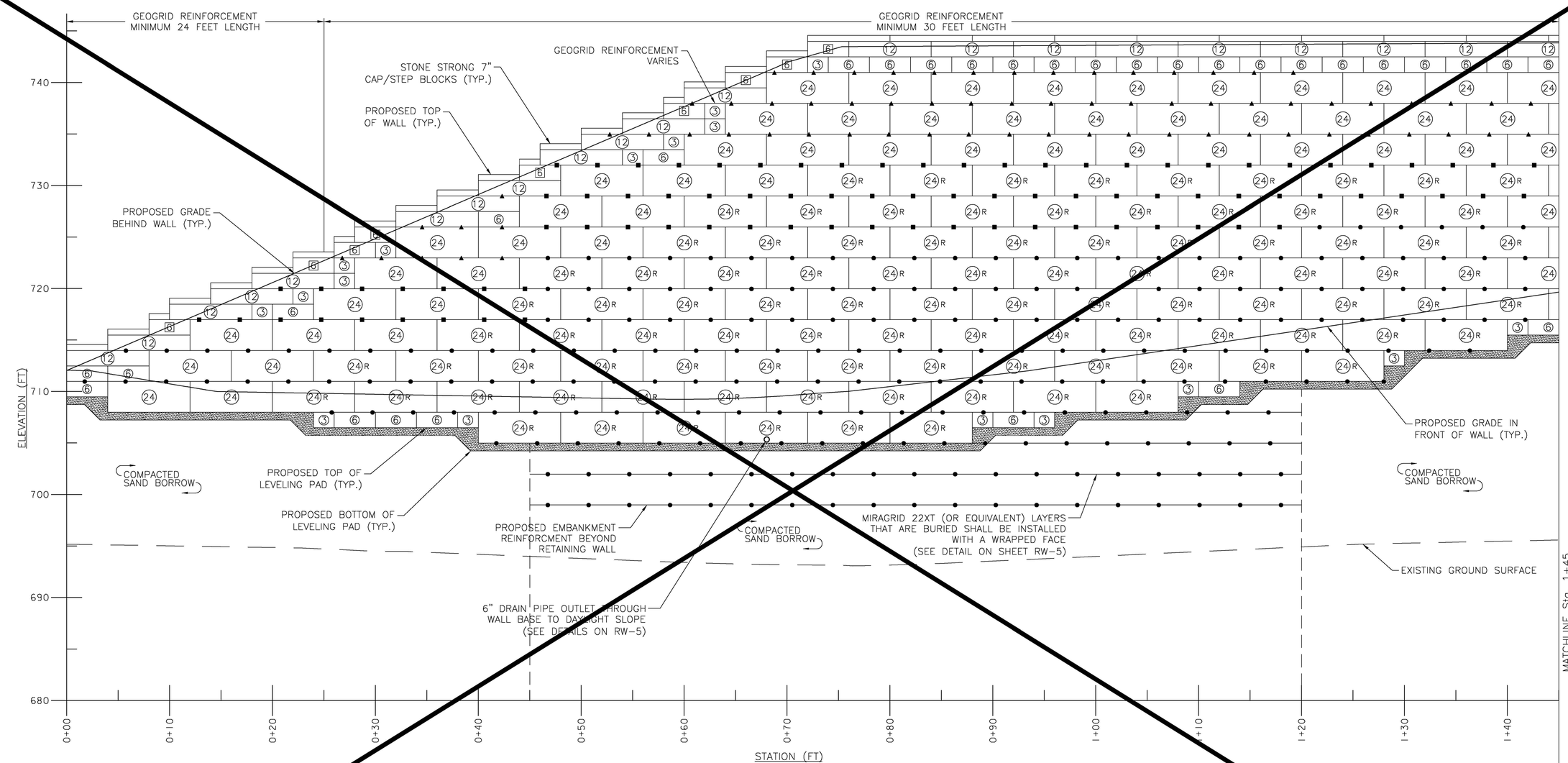

6/2/2013
P:\CADD\Consultants\z07h124pro_wall1.dgn

VERMONT AGENCY OF TRANSPORTATION

GEODESIGN INCORPORATED
Geotechnical | Construction | Environmental
Engineers and Scientists
54 MAIN STREET • WINDSOR, VT 05089
TELEPHONE: 802.674.2033 • FACSIMILE: 802.674.5943

DRAWING NO. RW-3
SHEET 3 OF 5

PROJECT NO. 0880-011.5

URS
URS CORPORATION
3 CORPORATE DRIVE, SUITE 203
CLIFTON PARK, NY 12065
(518) 688-0015

PROJECT NAME: RUTLAND SOUTHERN VERMONT REGIONAL AIRPORT CLARENDON, VERMONT
PROJECT NUMBER: AV14-8018-300

FILE NAME: z07h124pro_wall1.dgn
PROJECT LEADER: JWK
DESIGNED BY: RPJ
SEGMENTAL RETAINING WALL DEVELOPED ELEVATION 1

PLOT DATE: 6/2/2013
DRAWN BY: JPG / JPM
CHECKED BY: JAG
SHEET 23 OF 36

PROJECT RECORD DRAWINGS

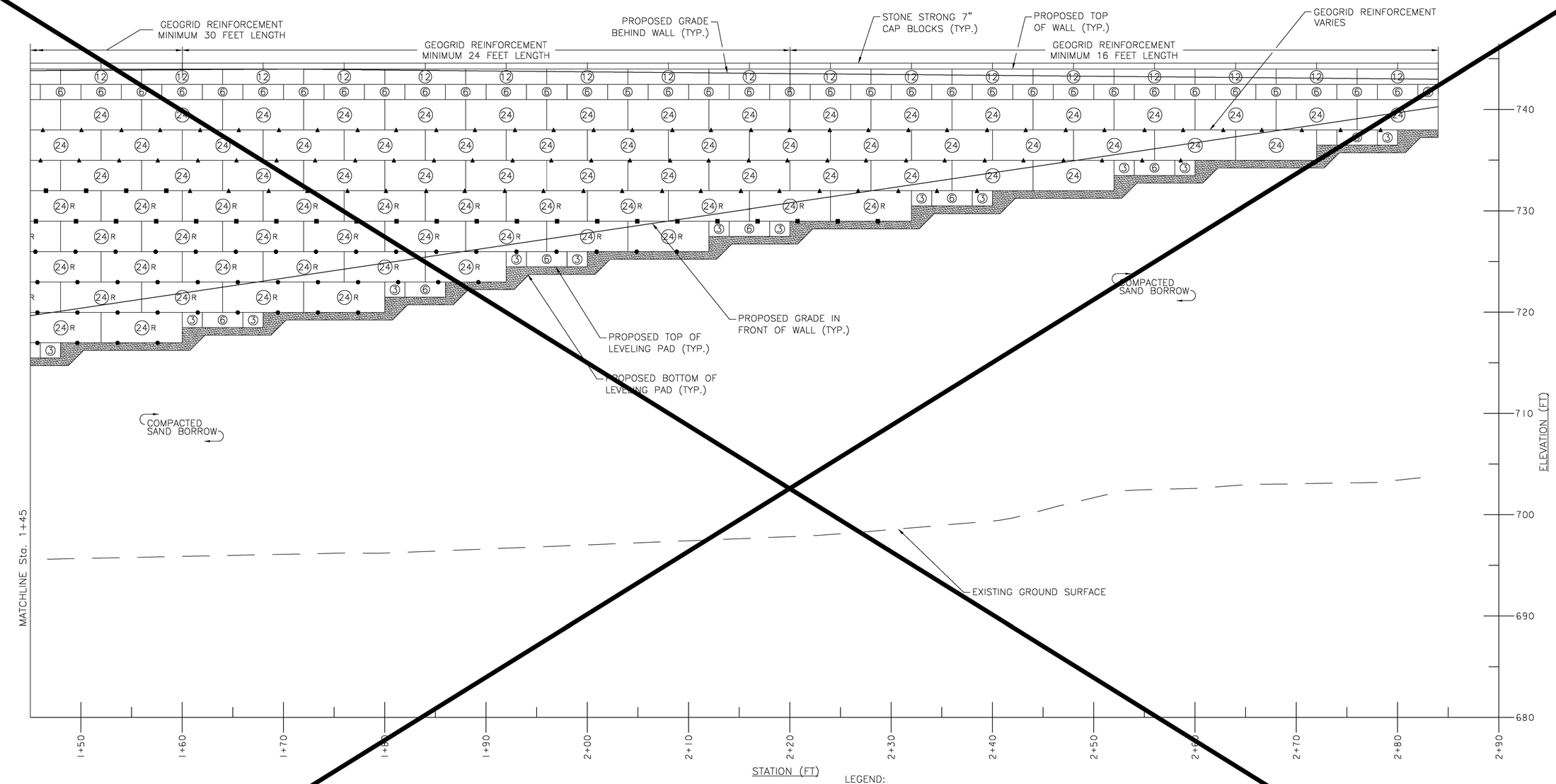

LEGEND:

MIRAGRID 5XT (OR EQUIVALENT)	24	STONE STRONG 24 SF UNIT	12	STONE STRONG 12 SF UNIT DUAL FACE BLOCK
MIRAGRID 10XT (OR EQUIVALENT)	24R	REINFORCED STONE STRONG 24 SF UNIT	6	STONE STRONG 6 SF UNIT HALF 12 SF DUAL FACE BLOCK
MIRAGRID 22XT (OR EQUIVALENT)	6	STONE STRONG 6 SF UNIT	3	STONE STRONG 3 SF UNIT

AIP 3-50-0015-34

0 5 10
SCALE IN FEET

GEODESIGN INCORPORATED
Geotechnical | Construction | Environmental
Engineers and Scientists
54 MAIN STREET • WINDSOR, VT 05089
TELEPHONE: 802.674.2033 • FACSIMILE: 802.674.5943

DRAWING NO. RW-4
SHEET 4 OF 5
PROJECT NO. 0880-011.5

URS
URS CORPORATION
3 CORPORATE DRIVE, SUITE 203
CLIFTON PARK, NY 12065
(518) 688-0015

VERMONT AGENCY OF TRANSPORTATION

PROJECT NAME: RUTLAND SOUTHERN VERMONT REGIONAL AIRPORT CLARENDON, VERMONT
PROJECT NUMBER: AV14-8018-300

FILE NAME: z07h124pro_wall2.dgn
PROJECT LEADER: JWK
DESIGNED BY: RPJ
SEGMENTAL RETAINING WALL DEVELOPED ELEVATION 2
PLOT DATE: 6/2/2013
DRAWN BY: JPG / JPM
CHECKED BY: JAG
SHEET 24 OF 36

6/2/2013
P:\CADD\Consultants\z07h124pro_wall2.dgn

PROJECT RECORD DRAWINGS

NOTES:
1. USE REINFORCED 24 SF UNITS BELOW TOP 12' IN GEOGRID REINFORCED WALLS. SEE FACE AND WEB MESH DETAILS FOR OPTIONAL REINFORCEMENT GRID.
2. CHISELED GRANITE STYLE HAS 4 DIFFERENT FACE PATTERNS ON 24 SF BLOCKS. INSTALL A, B, C, & D PATTERNS AT RANDOM IN WALL (IF APPLICABLE).

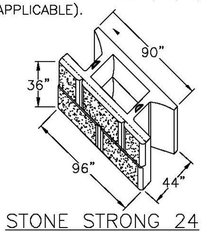

STONE STRONG 24 SF UNIT CHISELED GRANITE FACE
NOT TO SCALE

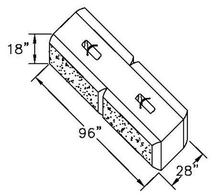

STONE STRONG DUAL FACE UNIT
NOT TO SCALE

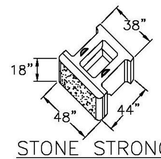

STONE STRONG 6 SF UNIT
NOT TO SCALE

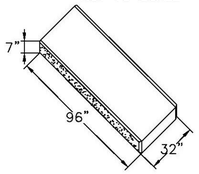

STONE STRONG CAP–STEP BLOCK
NOT TO SCALE

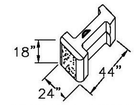

STONE STRONG 3 SF UNIT
NOT TO SCALE

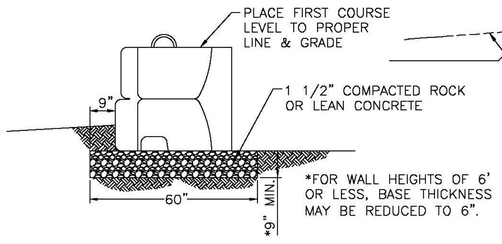

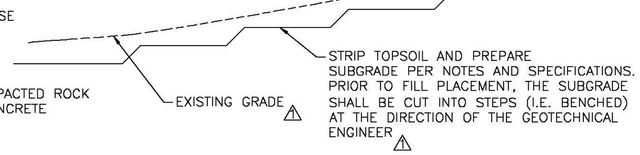

24 SF REINFORCED WALL CROSS SECTION
NOT TO SCALE

NOTE: BEARING CONDITIONS SHALL BE OBSERVED BY THE SITE GEOTECHNICAL ENGINEER. BASE DIMENSIONS MAY BE INCREASED TO ADDRESS DEFICIENT SOIL BEARING CONDITIONS.

24 SF WALL BASE
NOT TO SCALE

⚠	6/11	DESIGN ADDENDUM 1	RPJ	JAG	JWK
NO.	DATE		DRWN	CHKD	APPVD
REVISIONS					

Record Drawings
Work completed in general conformance with contract plans.



0 10 20
SCALE IN FEET

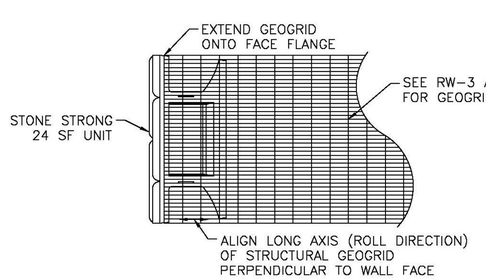

24 SF GEOGRID ORIENTATION
NOT TO SCALE

GENERAL NOTES:
1.REFER TO SHEETS RW–1 THROUGH RW–5 FOR DETAILS OF MODULAR BLOCK LAYOUT.
2.REFER TO SHEETS RW–1 THROUGH RW–5 FOR DETAILS OF GEOGRID LAYOUT, EMBEDMENT LENGTH, AND TYPE.

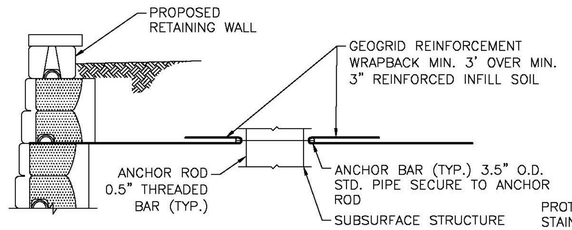

SUBSURFACE STRUCTURE DETAIL
NOT TO SCALE

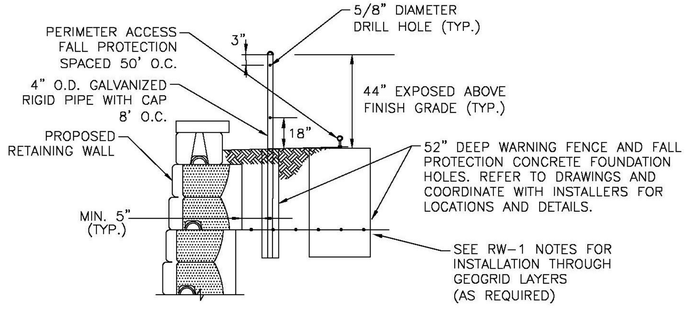

WALL WARNING FENCE AND FALL PROTECTION DETAIL
NOT TO SCALE

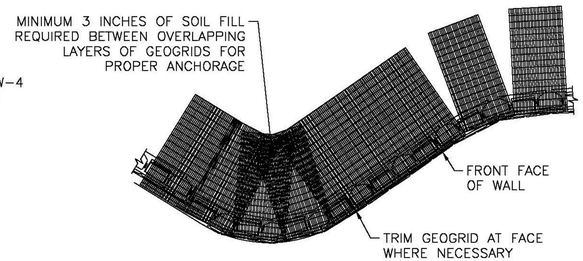

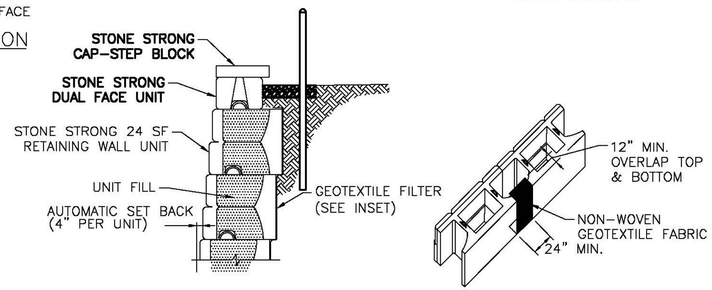

24 SF GRAVITY WALL CROSS SECTION w/GEOTEXTILE FILTER
NOT TO SCALE

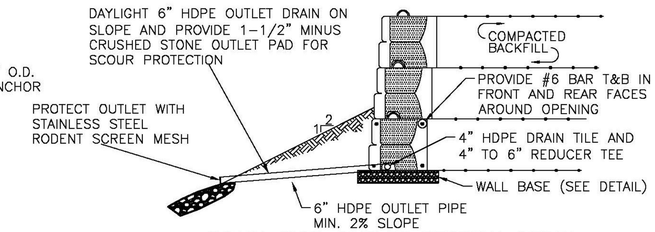

DRAIN PIPE OUTLET SECTION DETAIL
NOT TO SCALE

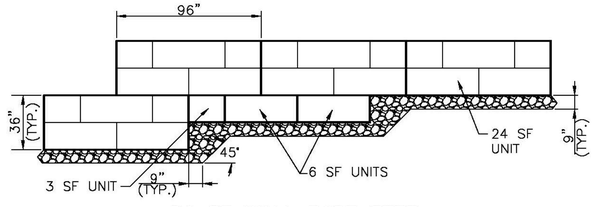

24 SF WALL BASE STEP
NOT TO SCALE

AIP 3-50-0015-34

VERMONT AGENCY OF TRANSPORTATION

GEODESIGN INCORPORATED
Geotechnical | Construction | Environmental Engineers and Scientists
54 MAIN STREET · WINDSOR, VT 05089
TELEPHONE: 802.674.2033 · FACSIMILE: 802.674.5943

URS
URS CORPORATION
3 CORPORATE DRIVE, SUITE 203
CLIFTON PARK, NY 12065
(518) 688-0015

DRAWING NO. RW–5
SHEET 5 OF 5
PROJECT NO. 0880–011.5

PROJECT NAME: RUTLAND SOUTHERN VERMONT REGIONAL AIRPORT
CLARENDON, VERMONT
PROJECT NUMBER: AV14-8018-300

FILE NAME: z07h124detail_wall2.dgn
PROJECT LEADER: JWK
DESIGNED BY: RPJ
SEGMENTAL RETAINING WALL AND CONCRETE BUTTRESS DETAILS

PLOT DATE: 6/11/13
DRAWN BY: JPG / JPM
CHECKED BY: JAG
SHEET 25 OF 36

PROJECT RECORD DRAWINGS

NOTES:
1. USE REINFORCED 24 SF UNITS BELOW TOP 12' IN GEOGRID REINFORCED WALLS. SEE FACE AND WEB MESH DETAILS FOR OPTIONAL REINFORCEMENT GRID.
2. CHISELED GRANITE STYLE HAS 4 DIFFERENT FACE PATTERNS ON 24 SF BLOCKS. INSTALL A, B, C, & D PATTERNS AT RANDOM IN WALL (IF APPLICABLE).

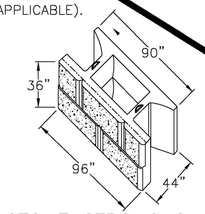

STONE STRONG 24 SF UNIT CHISELED GRANITE FACE
NOT TO SCALE

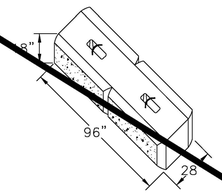

STONE STRONG DUAL FACE UNIT
NOT TO SCALE

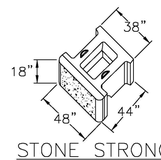

STONE STRONG 6 SF UNIT
NOT TO SCALE

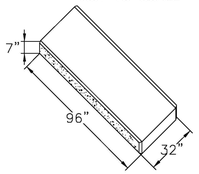

STONE STRONG CAP-STEP BLOCK
NOT TO SCALE

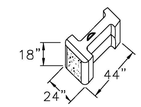

STONE STRONG 3 SF UNIT
NOT TO SCALE

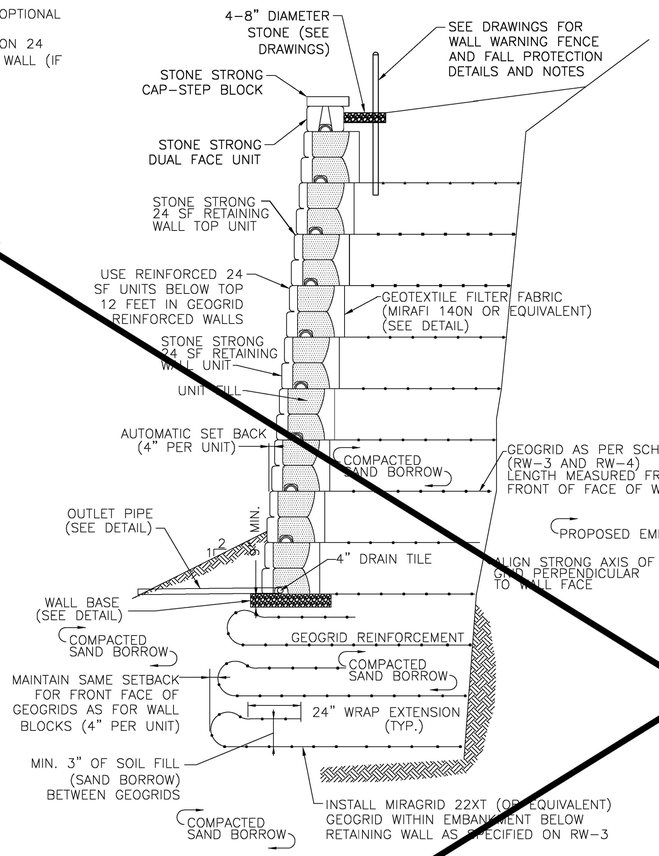

24 SF REINFORCED WALL CROSS SECTION
NOT TO SCALE

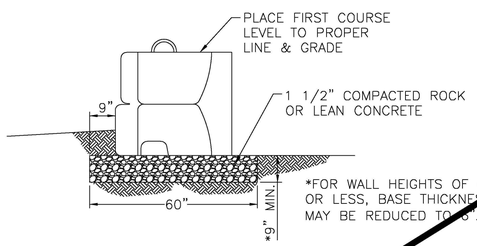

NOTE: BEARING CONDITIONS SHALL BE OBSERVED BY THE SITE GEOTECHNICAL ENGINEER. BASE DIMENSIONS MAY BE INCREASED TO ADDRESS DEFICIENT SOIL BEARING CONDITIONS.

24 SF WALL BASE
NOT TO SCALE

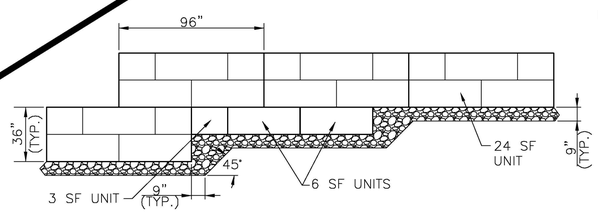

24 SF WALL BASE STEP
NOT TO SCALE

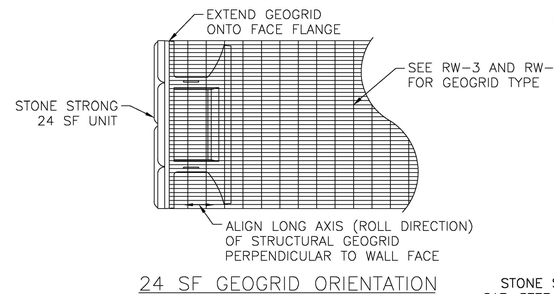

24 SF GEOGRID ORIENTATION
NOT TO SCALE

GENERAL NOTES:
1. REFER TO SHEETS RW-1 THROUGH RW-5 FOR DETAILS OF MODULAR BLOCK LAYOUT.
2. REFER TO SHEETS RW-1 THROUGH RW-5 FOR DETAILS OF GEOGRID LAYOUT, EMBEDMENT LENGTH AND TYPE.

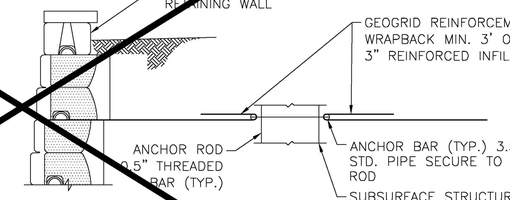

SUBSURFACE STRUCTURE DETAIL
NOT TO SCALE

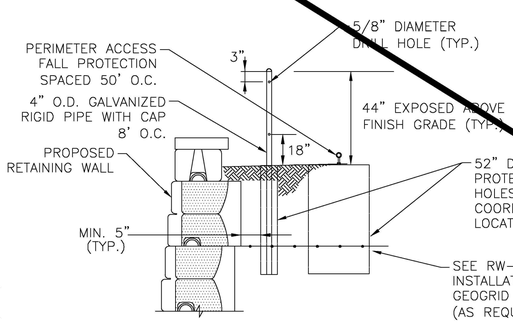

WALL WARNING FENCE AND FALL PROTECTION DETAIL
NOT TO SCALE

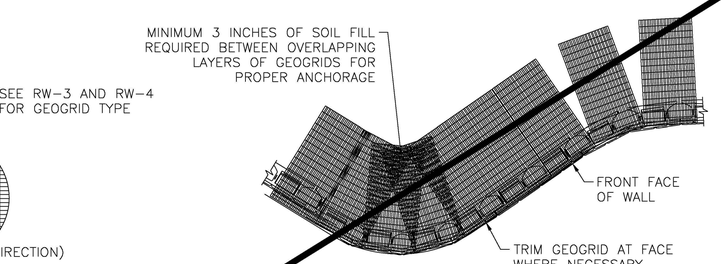

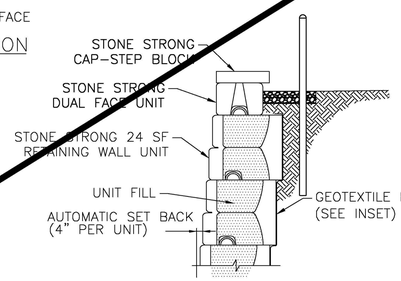

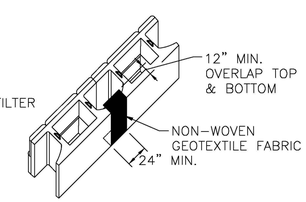

24 SF GRAVITY WALL CROSS SECTION w/GEOTEXTILE FILTER
NOT TO SCALE

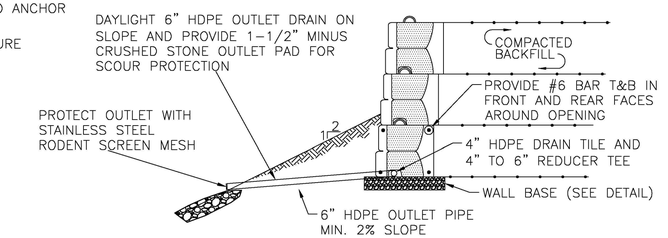

DRAIN PIPE OUTLET SECTION DETAIL
NOT TO SCALE



AIP 3-50-0015-34

0 10 20
SCALE IN FEET

GEODESIGN INCORPORATED
Geotechnical | Construction | Environmental Engineers and Scientists
54 MAIN STREET • WINDSOR, VT 05089
TELEPHONE: 802.674.2033 • FACSIMILE: 802.674.5943

DRAWING NO. RW-5
SHEET 5 OF 5
PROJECT NO. 0880-011.5

URS
URS CORPORATION
3 CORPORATE DRIVE, SUITE 203
CLIFTON PARK, NY 12065
(518) 688-0015

VERMONT AGENCY OF TRANSPORTATION

PROJECT NAME: RUTLAND SOUTHERN VERMONT REGIONAL AIRPORT CLARENDON, VERMONT
PROJECT NUMBER: AV14-8018-300

FILE NAME: z07hi24detail_wall2.dgn PLOT DATE: 6/2/2013
PROJECT LEADER: JWK DRAWN BY: JPG / JPM
DESIGNED BY: RPJ CHECKED BY: JAG
SEGMENTAL RETAINING WALL AND CONCRETE BUTTRESS DETAILS SHEET 25 OF 36

6/2/2013
P:\CADD\Consultants\z07hi24detail_wall2.dgn

PROJECT RECORD DRAWINGS

B-1
STA. 9+15 A.R.

N 1-1-2-3	TOPSOIL 2'
N 2-4-2-1	GRAVELLY SILT & SAND 5.1'
100/2" 5.5'	WEATHERED BEDROCK/ RESIDUAL SOIL

BOTTOM OF EXPLORATION @ 5.5'

B-2
STA. 7+40 A.R.

N 1-1-2-2	TOPSOIL 2'
N 2-3-9-8	GRAVELLY SILT & SAND 4'
N 50-27-15-16	WEATHERED BEDROCK/ 6' RESIDUAL SOIL
100/2" 6.6'	

BOTTOM OF EXPLORATION @6.6'

B-3
STA. 5+66 A.R.

N 1-3-2-2	TOPSOIL 4'
N 5-3-2-2	
N 4-7-7-10	WEATHERED BEDROCK/ RESIDUAL SOIL 9.5'
N 7-9-17-42	
50/0"	

BOTTOM OF EXPLORATION @9.5'

B-4
STA. 6+50 48' RT A.R.

INFERRED SOIL/ WEATHERED BEDROCK 5.5'

BOTTOM OF EXPLORATION @5.5'

B-5
STA. 8+31 49' RT A.R.

INFERRED SOIL/ WEATHERED BEDROCK 5.5'

BOTTOM OF EXPLORATION @5.5'

B-6
STA. 158+50 200' RT RWY

N 1-1-3-9	TOPSOIL 4'
N 14-8-7-6	
N 3-5-6-2	GRAVELLY SILT & SAND 10'
N 1-2-2-10	
N 12-16-8-8	WEATHERED BEDROCK/ RESIDUAL SOIL 16.9'
N 9-12-24-21	
N 20-17-28-100/4"	

BOTTOM OF EXPLORATION @ 16.9'

B-7
STA. 159+00 300' RT RWY

N 2-2-5-20	TOPSOIL 7'
N 9-3-2-4	
N 7-9-8-25	GRAVELLY SILT & SAND 8.5'
N 30-18-19-14	
N 22-27-22-28	WEATHERED BEDROCK/ RESIDUAL SOIL 17.5'
N 19-17-11-14	
50/0"	

BOTTOM OF EXPLORATION @ 17.5'

B-8
STA. 158+50 260' LT RWY

N 1-1-4-2	TOPSOIL 2'
N 2-2-3-3	FILL 7'
N WOH-7-5-5	
N 9-22-30-21	GRAVELLY SILT & SAND 25'
N 53-45-37-32	
N 8-18-28-28	
N 34-40-45-47	
N 15-46-50/0"	26' WEATHERED BEDROCK

BOTTOM OF EXPLORATION @ 26.0'

B-9
STA. 154+00 278' LT RWY

N 1-2-4-4	TOPSOIL 2'
N 3-2-3-4	
N 9-15-12-12	FILL 10'
N 11-14-15-14	
N 7-11-16-27	GRAVELLY SILT & SAND 25'
N 11-17-23-37	
16-36-41-49	
100/3"	25.5' WEATHERED BEDROCK

BOTTOM OF EXPLORATION @ 25.5'

B-10
STA. 159+50 100' RT RWY

N 1-2-2-2	TOPSOIL 4'
N 3-3-4-5	GRAVELLY SILT & SAND 10'
N 2-1-3-5	
N 5-4-6-7	WEATHERED BEDROCK/ RESIDUAL SOIL 14.6'
N 14-23-16-14	
100/2"	

BOTTOM OF EXPLORATION @ 14.6'

B-11
STA. 159+50 50' LT RWY

N 2-4-5-2	TOPSOIL 2'
N 1-5-2-8	FILL 7'
N 8-6-7-11	
N 7-10-8-9	GRAVELLY SILT & SAND 16.5'
N 9-7-9-12	
N 30-19-31-25	WEATHERED BEDROCK/ RESIDUAL SOIL 20'
50/0"	

BOTTOM OF EXPLORATION @ 20.0'

B-12
STA 158+00 30' RT RWY

N 11-9-8-9	BASE GRAVEL 2'
N 5-4-9-6	FILL 12'
N 2-2-3-4	
N 2-3-2-1	GRAVELLY SILT & SAND 19.5'
N 4-6-7-5	
N 4-12-26-44	
N 15-22-22-22	
100/5"	20.1' WEATHERED BEDROCK

BOTTOM OF EXPLORATION @ 20.1'

B-13
STA. 6+12 149' RT A.R.

N 1-2-2-3	TOPSOIL 2'
N 10-13-96-100/3"	WEATHERED BEDROCK 4'

BOTTOM OF EXPLORATION @ 4.0'

LEGEND:

B-# = BORING NUMBER
STA. XXX+XX = LOCATION

BLOW COUNTS*
N 14-8-7-6
N 3-5-6-2
GROUNDWATER DEPTH

SOIL TYPE
4' =SOIL DEPTH

*BLOWS/6" SOIL PENETRATION

NTS

TP-101
STA. 5+78 A.R.

DK br. SILT & fine to coarse SAND
Br. fine to coarse SAND, little Silt, trace fine to coarse Gravel
Gr. with orange WEATHERED BEDROCK, some Silt

BOTTOM OF EXPLORATION @ 4.0'

TP-102
STA. 6+92 A.R.

Brown SILT & fine to coarse SAND
Lt. br. fine to med. SAND & SILT, tr. fine to coarse Gravel
Gr. with orange COBBLES & fine to coarse GRAVEL (weathered bedrock) some fine to coarse Sand, little Silt

BOTTOM OF EXPLORATION @ 3.5'

TP-103
STA. 8+16 A.R.

Br. SILT & fine to coarse SAND
Lt. br. to ten SILT & fine to coarse SAND, little fine to coarse Gravel
Br. & gr. GRAVEL & SILT, some fine to coarse SAND
Lt. br. & gr. weathered bedrock

BOTTOM OF EXPLORATION @ 5.0'

TP-104
STA. 9+22 A.R.

Br. fine to coarse SAND & SILT
Ten SILT, some fine to coarse Sand, little fine to coarse Gravel, little Cobbles
Ten COBBLES & BOULDERS, some Silt, some fine to coarse Sand

BOTTOM OF EXPLORATION @ 5.5'

TP-105
STA. 159+24 276' RT RWY

Br. SILT & fine to coarse SAND, trace fine Gravel
Lt. br. to ten SILT & fine to coarse SAND, some fine to coarse Gravel

BOTTOM OF EXPLORATION @ 5.0'

TP-106
STA. 159+00 208' RT RWY

Br. SILT & fine to coarse SAND, little fine to coarse Gravel, trace Cobbles
Lt. br to ten fine to coarse SAND & SILT, little fine to coarse Gravel

BOTTOM OF EXPLORATION @ 3.0'

TP-107
STA. 159+53 156' RT RWY

Br. SILT & fine to coarse SAND, little fine to coarse Gravel
Lt. br. SILT, some fine to coarse Sand, little fine to coarse Gravel

BOTTOM OF EXPLORATION @ 3.0'

TP-108
STA. 159+40 40' RT RWY

DK. br. SILT & fine to coarse SAND, trace fine to coarse Gravel
Mottled lt. br./br. SILT, some fine to coarse Sand, little fine to coarse Gravel
Lt. br. SILT & fine to coarse SAND, some fine to coarse Gravel

BOTTOM OF EXPLORATION @ 5.0'

TP-109
STA. 159+34 96' LT RWY

Lt. br. SILT & fine to medium SAND, tr. fine to coarse Gravel
Lt. br. to ten SILT, some fine to coarse SAND, tr. fine Gravel

BOTTOM OF EXPLORATION @ 5.0'

TP-110
STA. 158+24 30' RT RWY

Br. SILT, some fine to coarse Sand, tr. fine to coarse Gravel
Ten mottled with lt. br. SILT & fine to coarse SAND, little fine to coarse Gravel

BOTTOM OF EXPLORATION @ 5.5'

TP-111
STA. 157+70 148' RT RWY

Br. SILT & fine to coarse SAND
Ten to lt. br. fine to coarse SAND & Silt

BOTTOM OF EXPLORATION @ 5.0'

TP-112
STA. 4+62 A.R.

DK. br. to br. fine to medium SAND & SILT
Lt. br. SILT & fine to medium SAND, tr. fine to coarse Gravel
Gr. COBBLES & BOULDERS, some fine to medium Sand, some Silt

BOTTOM OF EXPLORATION @ 4.0'

TP-113
STA. 158+50 200' RT RWY

Br. SILT
Lt. br to ten fine to coarse SAND & SILT, tr. fine to coarse Gravel

BOTTOM OF EXPLORATION @ 4.0'

TP-114
STA. 159+00 300' RT RWY

Br. fine to coarse SAND & SILT
Lt. br to ten fine to coarse SAND, some Cobbles & Boulders, some Silt, tr. fine to coarse Gravel

BOTTOM OF EXPLORATION @ 4.0'

STATE OF VERMONT
DONALD W. D'AMICO
No. 3872
REGISTERED
PROFESSIONAL ENGINEER

LEGEND:

TP-# = TEST PIT NUMBER
STA. XXX+XX = LOCATION

Br. SILT, some fine to coarse Sand, tr. fine to coarse Gravel
Ten mottled with lt. br. SILT & fine to coarse SAND, little fine to coarse Gravel

BOTTOM OF EXPLORATION @ 5.5'

NTS

NOTES:
1. BORING LOCATIONS SHOWN ON SHEET 14.
2. BORINGS TAKEN JULY 2009 BY GEODESIGN, INC, WINDSOR, VT (SEE PRELIMINARY GEOTECHNICAL ENGINEERING REPORT FROM GEODESIGN DATED OCTOBER 20, 2009)
3. TEST PITS TAKEN SEPTEMBER 2012 BY GEODESIGN, INC, WINDSOR, VT
4. STATIONING FOR B-1 TO B-5 & B-13 CORRESPONDS TO AIRPORT ROAD AS INDICATED BY A.R.; STATIONING FOR B6 TO B-12 CORRESPONDS TO RUNWAY 1-19 AS INDICATED BY RWY.

AIP 3-50-0015-34

VERMONT AGENCY OF TRANSPORTATION

URS
URS CORPORATION
3 CORPORATE DRIVE, SUITE 203
CLIFTON PARK, NY 12065
(518) 688-0015

PROJECT NAME: RUTLAND SOUTHERN VERMONT REGIONAL AIRPORT
CLARENDON, VERMONT
PROJECT NUMBER: AV14-8018-300

FILE NAME: z07hl24bl.dgn
PROJECT LEADER: F. WALSH
DESIGNED BY: G. D'AMICO
BORING AND TEST PIT LOGS
PLOT DATE: 6/2/2013
DRAWN BY: M. WASSON
CHECKED BY:
SHEET 26 OF 36

PROJECT RECORD DRAWINGS

6/2/2013
P:\CADD\Consultants\z07hl24bl.dgn

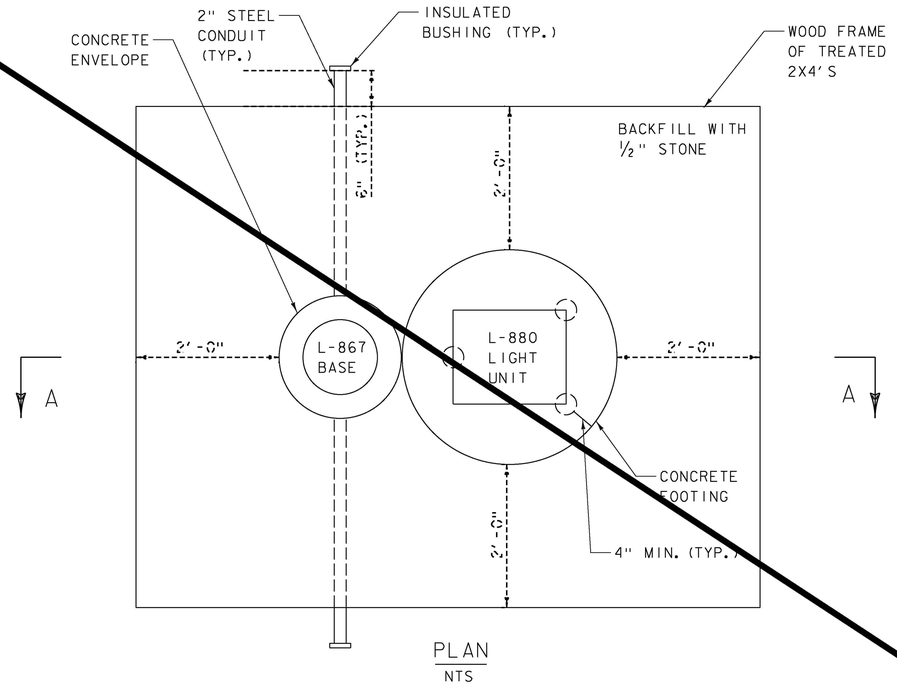

PLAN

NTS

NOTE:
MATERIALS TO BE SUPPLIED INCLUDE 4 L-880 LIGHT UNITS AND POWER ADAPTER. CONTRACTOR TO PROVIDE ALL OTHER MATERIALS AND LABOR TO INSTALL AS COMPLETED UNIT.

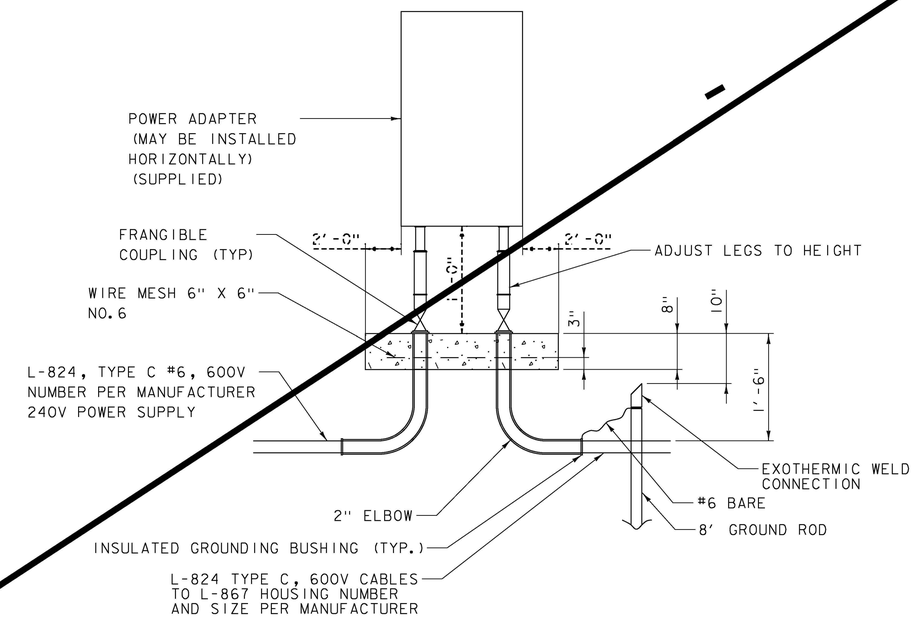

CONTROL PANEL

NTS

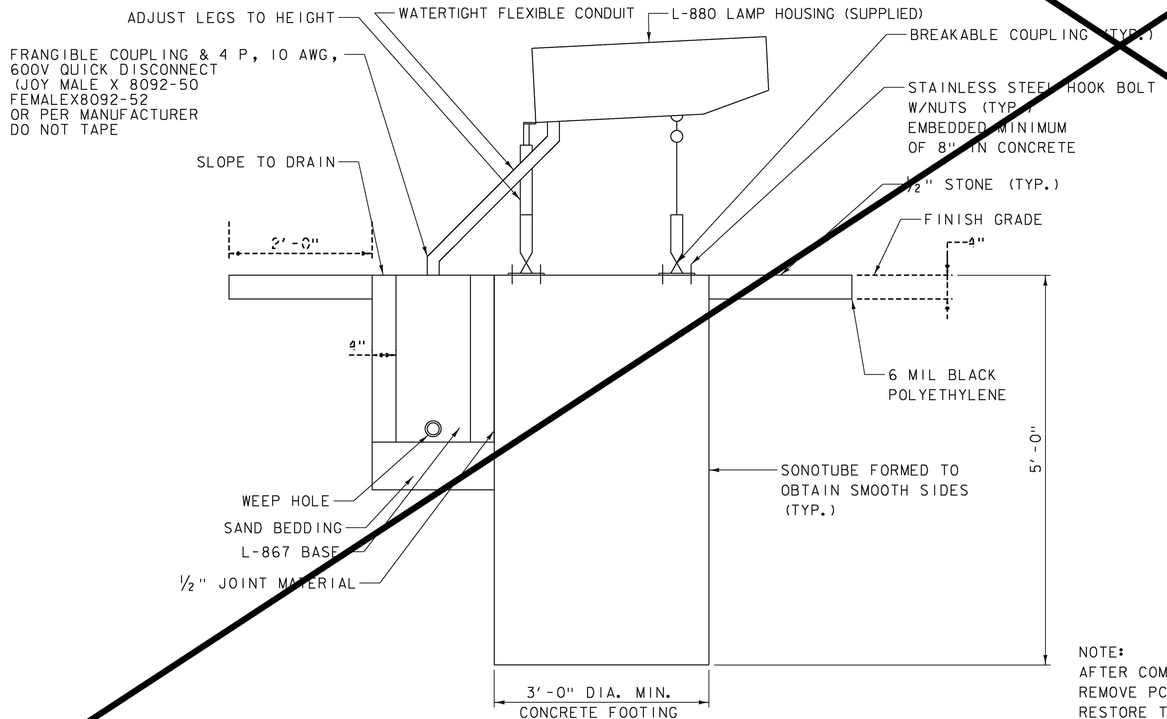

SECTION A-A

NTS

NOTE:
AFTER COMPLETION OF PROJECT CONTRACTOR TO REMOVE PCC FOUNDATIONS. BACKFILL W/SOIL AND RESTORE TO PRE-CONSTRUCTION CONDITIONS. (EXISTING CABLES CAN BE ABANDONED IN PLACE)

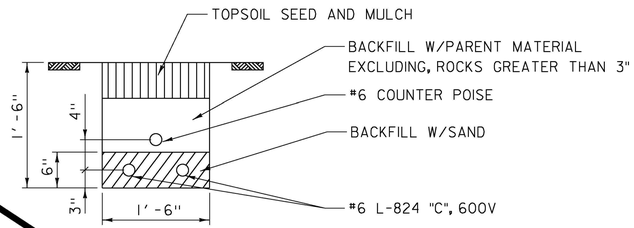

CABLE TRENCH-TYPICAL

NTS

STATE OF VERMONT
DONALD W. D'AMICO
No. 3873
REGISTERED
PROFESSIONAL ENGINEER

Record Drawings
Temporary PAPI removed from contract

AIP 3-50-0015-34

VERMONT AGENCY OF TRANSPORTATION

URS
URS CORPORATION
3 CORPORATE DRIVE, SUITE 203
CLIFTON PARK, NY 12065
(518) 688-0015

PROJECT NAME: RUTLAND SOUTHERN VERMONT REGIONAL AIRPORT
CLARENDON, VERMONT
PROJECT NUMBER: AV14-8018-300

FILE NAME: z07124hpapi1.dgn
PROJECT LEADER: F. WALSH
DESIGNED BY: G. D'AMICO
TEMP. PAPI DETAILS

PLOT DATE: 6/2/2013
DRAWN BY: R. ROSE
CHECKED BY:
SHEET 27 OF 36

6/2/2013
P:\CADD\Consultants\z07hl24papi1.dgn

PROJECT RECORD DRAWINGS

N

VT STATE PLANE GRID

VTRANS MAINTENANCE BUILDING

TOWER ON CONC. PAD

EDGE OF PVMT.

CB CONC

APPROXIMATE LOCATION OF FORCE MAIN

BIT. DRIVE

GLIDE SLOPE EQUIPMENT SHELTER

UG PAINTED UTILITIES

ELEC. BOX

GRAVEL DRIVE

6'X6'X6' SUMP

6" HDPE

RSA

MAIN CONTROL (M)

GLIDE SLOPE REAR MAIN ANTENNA

GLIDE SLOPE CLEARANCE ANTENNA

GLIDE SLOPE FRONT MAIN ANTENNA

GLIDE SLOPE FIELD MONITOR ANTENNA

MH(ELEC.) RIM=772.28

MH(ELEC.) RIM=771.98

METAL ELEC. COVER

PAVEMENT SENSOR (S5)

MANHOLE RIM=777.41

MANHOLE RIM=776.38

MANHOLE RIM=774.88

VASI

CATCH BASIN GRATE=774.44 INV.=

CATCH BASIN GRATE=773.01 INV.=

38+00 139+00 140+00 141+00 142+00 143+00 144+00 145+00 146+00 147+00 148+00 149+00 150+00 151+00 152+00 153+00

100'

2-#6 L-824 'C', 600V+
1 #6 COUNTER POISE

CONNECT TO EXISTING VASI POWER CIRCUIT

TEMPORARY DISPLACED THRESHOLD STA. 146+50

#1 #2 #3 #4

20' 20' 20'

INSTALL TEMPORARY 4 BOX PAPI + POWER AND CONTROL UNIT, STA. 139+14

PAPI POWER AND CONTROL UNIT

PAPI NOTES

1. THE FOUR BOX PAPI WILL BE SUPPLIED BY THE BURLINGTON INTERNATIONAL AIRPORT. CONTRACTOR TO PICK UP AND DELIVER (AND RETURN) THE PAPI FROM THE BURLINGTON INTERNATIONAL AIRPORT. CONTACT THE AIRPORT ELECTRICIAN (COREY JEWELL) AT 802-863-1289 OR 802-310-8863 TO ARRANGE PICKUP.
2. EXISTING PAPI WAS MANUFACTURED BY DME CORPORATION, FT. LAUDERDALE, FL, IN 2009.
3. CONTRACTOR IS RESPONSIBLE FOR PICK UP AND DELIVERY OF ALL UNITS, INSTALLATION OF ALL FOUNDATIONS, CABLES, CONDUITS, MISCELLANEOUS HARDWARE, LEGS, FITTINGS, CONNECTIONS, ETC.), CLEANUP AND LANDSCAPING OF SITE AND ALL LAYOUT.
4. CONTRACTOR TO COORDINATE INSTALLATION WITH FAA TECHNICIAN EDCYR@BTL (802-657-4456)
5. DISCONNECT EXISTING VASI-4 AND ENERGIZE PAPI FROM VASI POWER SUPPLY (240V, 1 PHASE)
6. PAPI AIMING ANGLES:

UNIT	ANGLE
1	3 DEGREES 30 MINUTES
2	3 DEGREES 10 SECONDS
3	2 DEGREES 10 SECONDS
4	2 DEGREES 30 SECONDS

NOTE : THRESHOLD CROSSING HEIGHT = 40'

Record Drawings
Temporary PAPI removed from contract

EDGE OF R/W

CENTERLINE OF R/W

EDGE OF R/W

100' ℄ 20' ℄ 20' ℄ 20'

LHA #1 LHA #2 LHA #3 LHA #4

HORIZONTAL PLANE PASSING THROUGH LIGHT BEAM CENTERS SHALL BE 781.3 ± 1 INCH

PROPOSED BASE ELEVATION 778.7

APPROX. GROUND ELEV 778.7
PROPOSED BASE ELEV.
APPROX. GROUND ELEV 778.1
APPROX. GROUND ELEV 777.5
APPROX. GROUND ELEV 777.0

PAPI REFERENCE POINT RUNWAY CENTERLINE STA 139+14 APPROX. ELEV 781.3

TEMP. PAPI ELEVATION RUNWAY 19
NOT TO SCALE

* CONTRACTOR TO VERIFY R/W & ELEV @ 139+14

0 100 200
SCALE IN FEET

STATE OF VERMONT GERALD R. D'AMICO No. 3873 REGISTERED PROFESSIONAL ENGINEER

AIP 3-50-0015-34

VERMONT AGENCY OF TRANSPORTATION

URS
URS CORPORATION
3 CORPORATE DRIVE, SUITE 203
CLIFTON PARK, NY 12065
(518) 688-0015

PROJECT NAME: RUTLAND SOUTHERN VERMONT REGIONAL AIRPORT
CLARENDON, VERMONT
PROJECT NUMBER: AV14-8018-300

FILE NAME: z07h124ppi.dgn
PROJECT LEADER: F. WALSH
DESIGNED BY: G. D'AMICO
TEMPORARY PAPI PLAN

PLOT DATE: 6/2/2013
DRAWN BY: R. ROSS
CHECKED BY:
SHEET 28 OF 36

6/2/2013
P:\CADD\Consultants\z07h124ppi.dgn

PROJECT RECORD DRAWINGS

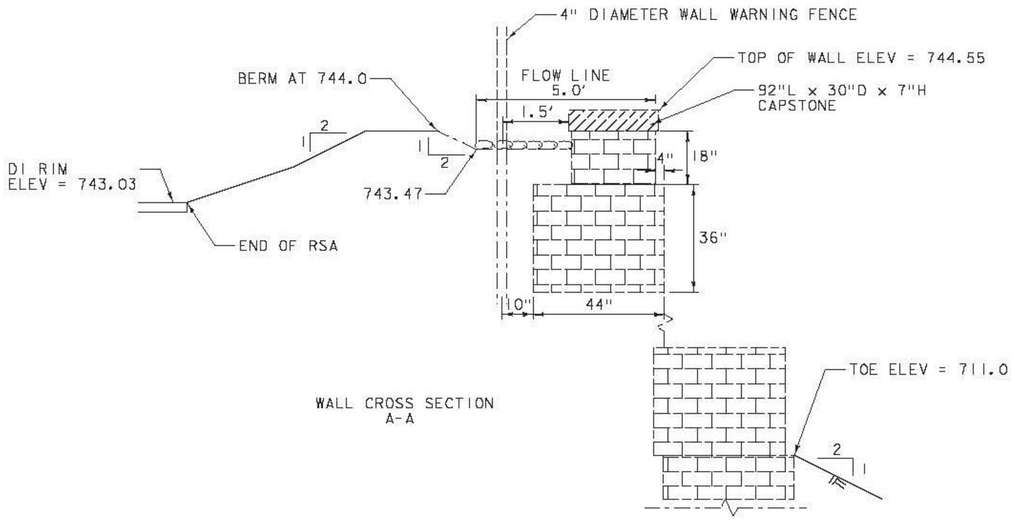

WALL CROSS SECTION
A-A

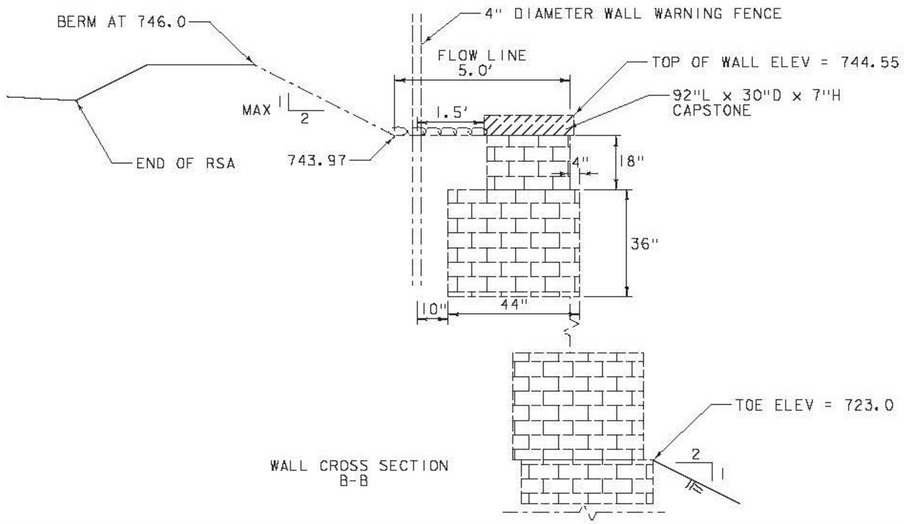

WALL CROSS SECTION
B-B

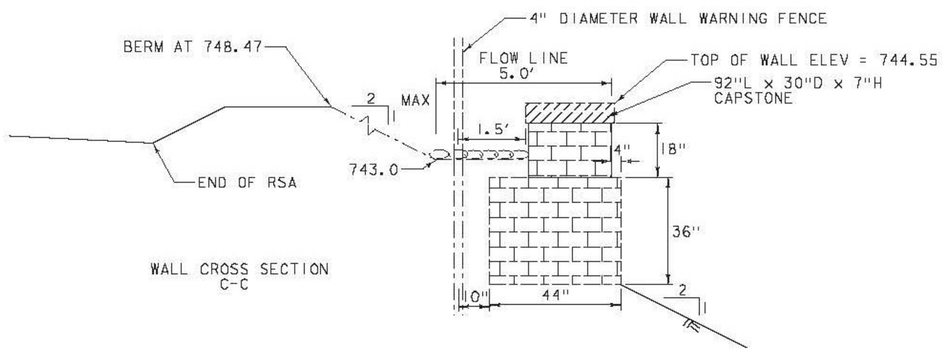

WALL CROSS SECTION
C-C

Record Drawings
Work completed in general conformance with contract plans.

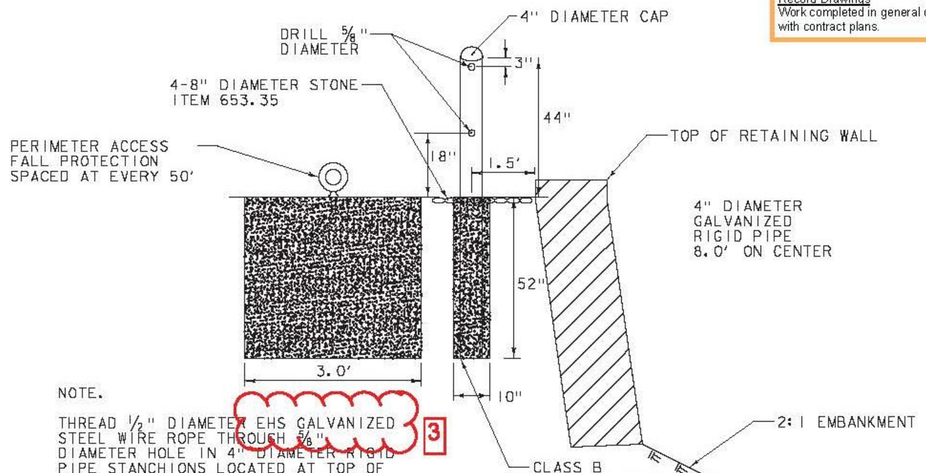

NOTE.

THREAD 1/2" DIAMETER EHS GALVANIZED STEEL WIRE ROPE THROUGH 5/8" DIAMETER HOLE IN 4" DIAMETER RIGID PIPE STANCHIONS LOCATED AT TOP OF RETAINING WALL AS WALL WARNING FENCE

PAINT 4" DIAMETER PIPE ORANGE.

CONTRACTOR TO DESIGN FALL ARREST SYSTEM CAPABLE OF SUPPORTING 5000 LBF PER ANSI Z 359. WALL WARNING FENCE IS INCIDENTAL TO THE COST OF RETAINING WALL.

WALL WARNING FENCE
NTS

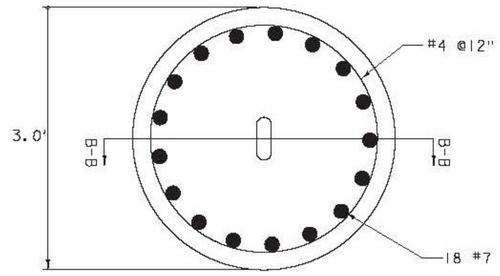

SECTION A-A

NOTES

3 EYEBOLT TO BE INSTALLED PERPENDICULAR TO WALL FACE

ALL CONCRETE TO BE f'c = 3000 PSI @ 28 DAY

ALL REINFORCING STEEL BARS TO BE ASTM A615 GRADE 60

ANCHOR POINTS TO BE SPACED AT 50' ON CENTER ALONG ENTIRE LENGTH OF WALL AND SET 2.25' FROM CENTER OF WALL WARNING FENCE

PERIMETER ACCESS FALL PROTECTION
NTS

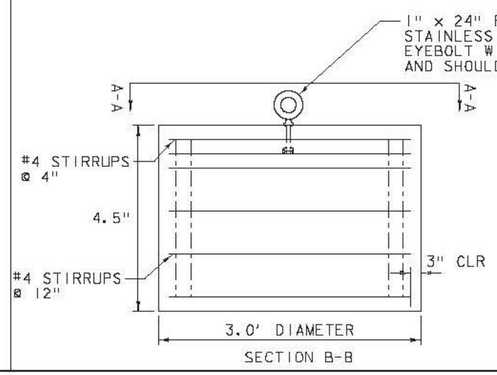

SECTION B-B

STATE OF VERMONT
DAVID W. D'AMICO
No. 3873
REGISTERED
PROFESSIONAL ENGINEER

3 6/17/13 Addendum 3

AIP 3-50-0015-34

VERMONT AGENCY OF TRANSPORTATION

URS
URS CORPORATION
3 CORPORATE DRIVE, SUITE 203
CLIFTON PARK, NY 12065
(518) 688-0015

PROJECT NAME: RUTLAND SOUTHERN VERMONT REGIONAL AIRPORT
CLARENDON, VERMONT
PROJECT NUMBER: AV14-8018-300

FILE NAME: z07h124detail_wall1.dgn
PROJECT LEADER: F. WALSH
DESIGNED BY: G. D'AMICO
RETAINING WALL DETAILS

PLOT DATE: 6/17/2013
DRAWN BY: M. KEMP
CHECKED BY:
SHEET 29 OF 36

PROJECT RECORD DRAWINGS

6/17/2013
P:\CADD\Consultants\z07h124detail_wall1.dgn

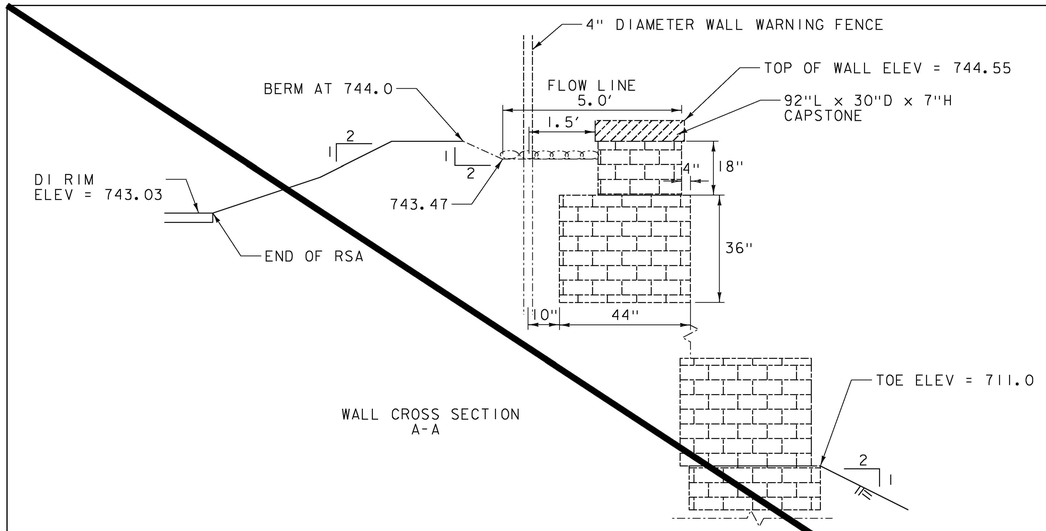

WALL CROSS SECTION
A-A

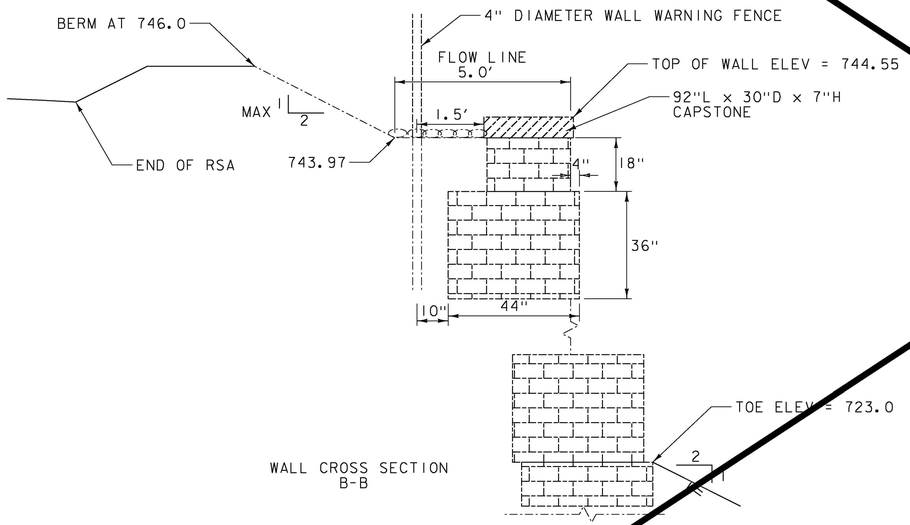

WALL CROSS SECTION
B-B

WALL CROSS SECTION
C-C

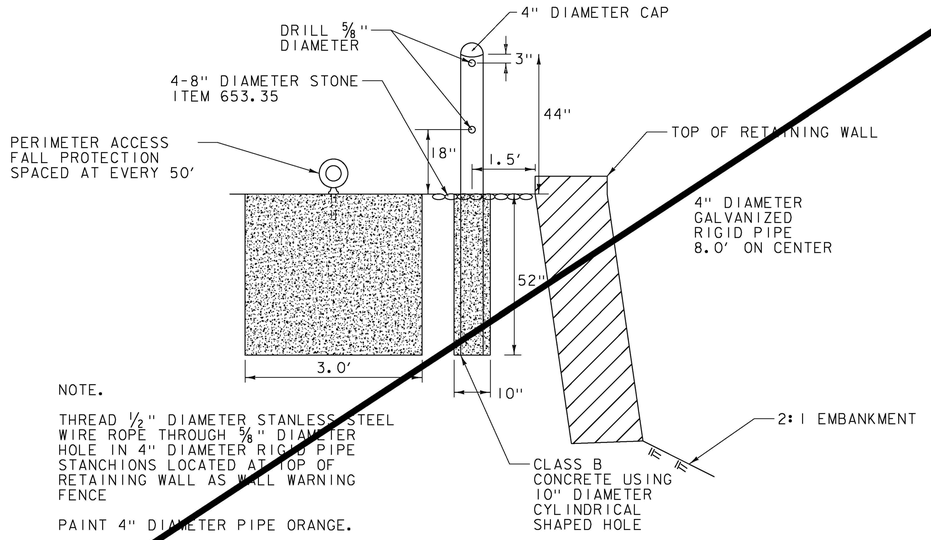

NOTE.

THREAD 1/2" DIAMETER STANLESS STEEL WIRE ROPE THROUGH 5/8" DIAMETER HOLE IN 4" DIAMETER RIGID PIPE STANCHIONS LOCATED AT TOP OF RETAINING WALL AS WALL WARNING FENCE

PAINT 4" DIAMETER PIPE ORANGE.

CONTRACTOR TO DESIGN FALL ARREST SYSTEM CAPABLE OF SUPPORTING 5000 LBF PER ANSI Z 359. WALL WARNING FENCE IS INCIDENTAL TO THE COST OF RETAINING WALL.

WALL WARNING FENCE
NTS

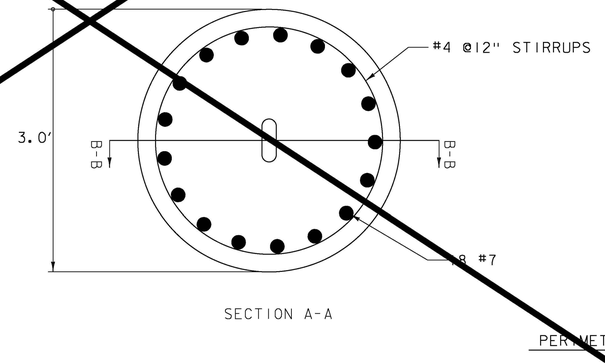

SECTION A-A

NOTES

ALL CONCRETE TO BE f'c = 3000 PSI @ 28 DAY

ALL REINFORCING STEEL BARS TO BE ASTM A615 GRADE 60

ANCHOR POINTS TO BE SPACED AT 50' ON CENTER ALONG ENTIRE LENGTH OF WALL AND SET 2.25' FROM CENTER OF WALL WARNING FENCE

PERIMETER ACCESS FALL PROTECTION
NTS

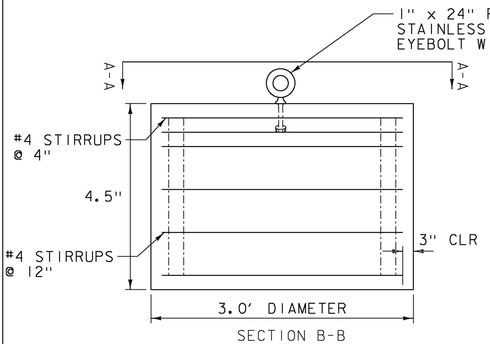

SECTION B-B

STATE OF VERMONT
GERALD W. D'AMICO
No. 3873
REGISTERED
PROFESSIONAL ENGINEER

AIP 3-50-0015-34

VERMONT AGENCY OF TRANSPORTATION

URS
URS CORPORATION
3 CORPORATE DRIVE, SUITE 203
CLIFTON PARK, NY 12065
(518) 688-0015

PROJECT NAME: RUTLAND SOUTHERN VERMONT REGIONAL AIRPORT
CLARENDON, VERMONT
PROJECT NUMBER: AV14-8018-300

FILE NAME: z07hl24detail_walll.dgn
PLOT DATE: 6/2/2013
PROJECT LEADER: F. WALSH
DRAWN BY: M. KEMP
DESIGNED BY: G. D'AMICO
CHECKED BY:
RETAINING WALL DETAILS
SHEET 29 OF 36

6/2/2013
P:\CADD\Consultants\z07hl24detail_walll.dgn

PROJECT RECORD DRAWINGS

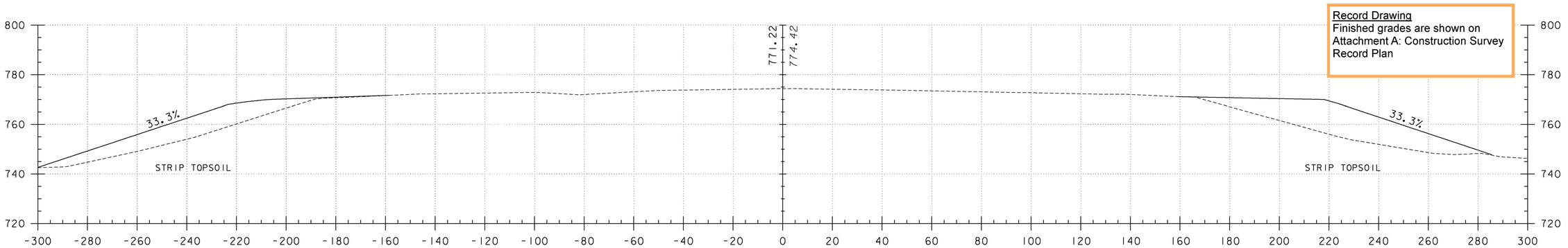

152+50

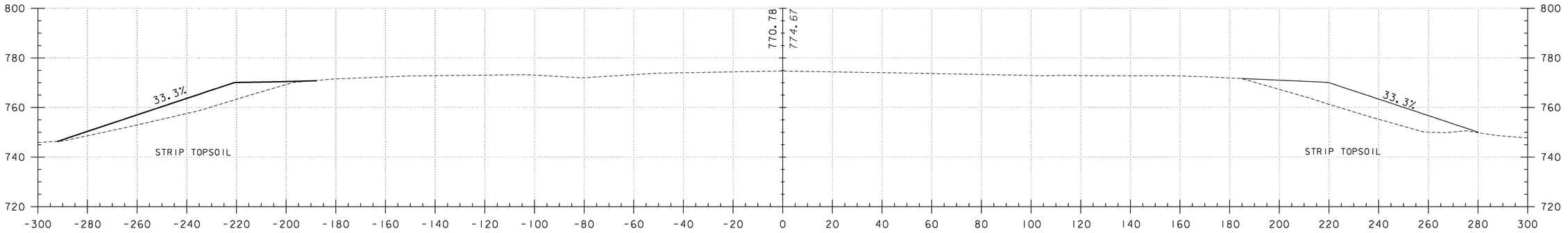

152+00

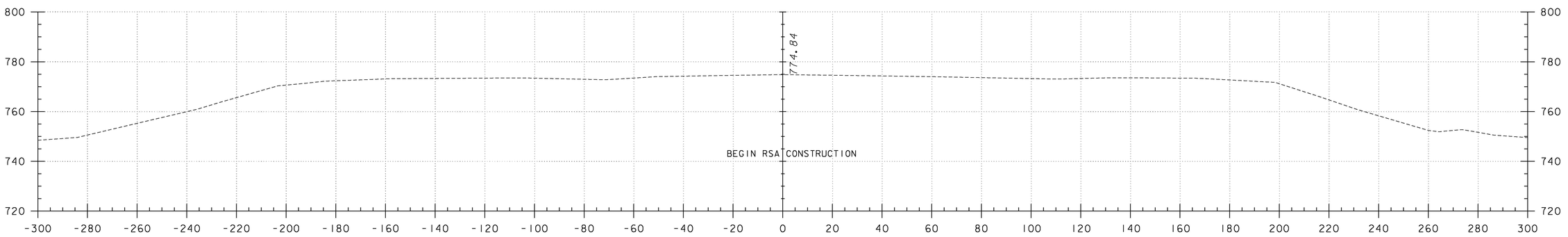

151+50

0 20 40
SCALE IN FEET

AIP 3-50-0015-34

STATE OF VERMONT
DONALD W. D'AMICO
No. 3873
REGISTERED
PROFESSIONAL ENGINEER

VERMONT AGENCY OF TRANSPORTATION

URS

URS CORPORATION
3 CORPORATE DRIVE, SUITE 203
CLIFTON PARK, NY 12065
(518) 688-0015

PROJECT NAME: RUTLAND SOUTHERN VERMONT REGIONAL AIRPORT
CLARENDON, VERMONT
PROJECT NUMBER: AV14-8018-300

FILE NAME: z07h124xs_rsa1.dgn
PROJECT LEADER: F. WALSH
DESIGNED BY: G. D'AMICO
RSA CROSS SECTIONS

PLOT DATE: 6/2/2013
DRAWN BY: M. KEMP
CHECKED BY:
SHEET 30 OF 36

PROJECT RECORD DRAWINGS

6/2/2013
P:\CADD\Consultants\z07h124xs_rsa1.dgn

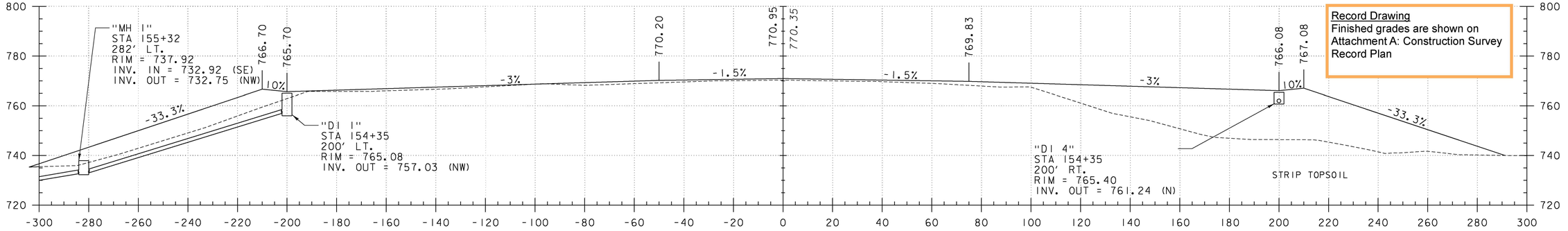

154+00

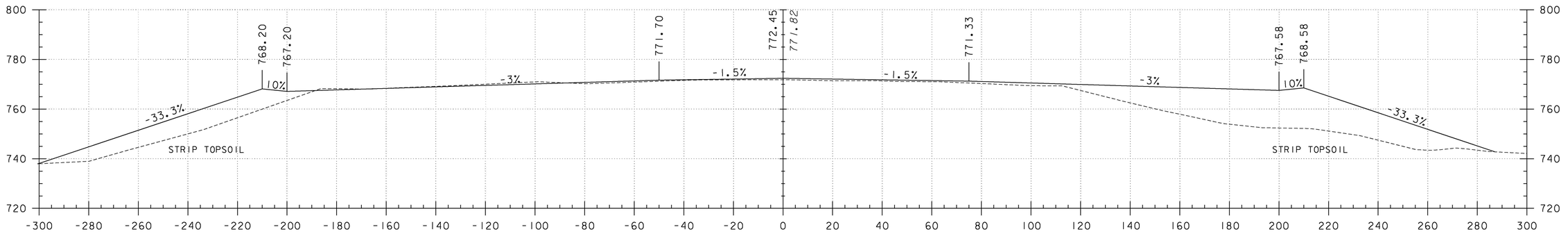

153+50

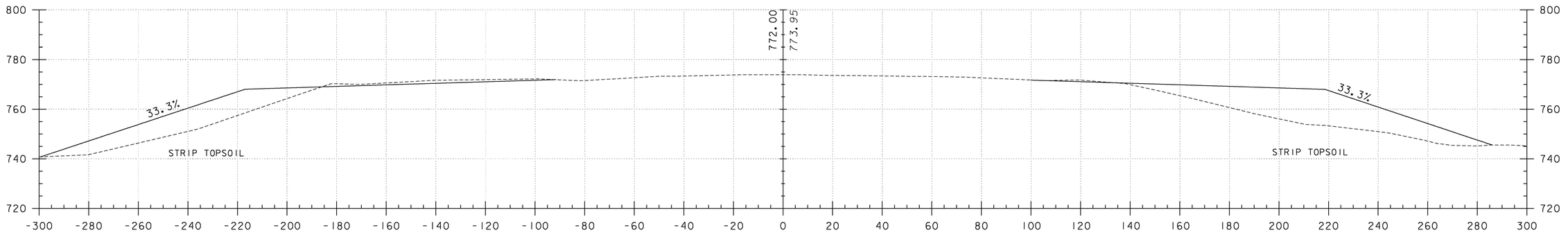

153+00

Record Drawing
Finished grades are shown on Attachment A: Construction Survey Record Plan

0 20 40
SCALE IN FEET

AIP 3-50-0015-34

6/2/2013
P:\CADD\Consultants\z07hl24xs_rsa2.dgn

VERMONT AGENCY OF TRANSPORTATION

URS
URS CORPORATION
3 CORPORATE DRIVE, SUITE 203
CLIFTON PARK, NY 12065
(518) 688-0015

PROJECT NAME: RUTLAND SOUTHERN VERMONT REGIONAL AIRPORT
CLARENDON, VERMONT
PROJECT NUMBER: AV14-8018-300

FILE NAME: z07hl24xs_rsa2.dgn
PROJECT LEADER: F. WALSH
DESIGNED BY: G. D'AMICO
RSA CROSS SECTIONS

PLOT DATE: 6/2/2013
DRAWN BY: M. KEMP
CHECKED BY:
SHEET 31 OF 36

STATE OF VERMONT · GERALD W. D'AMICO · No. 3873 · REGISTERED PROFESSIONAL ENGINEER

PROJECT RECORD DRAWINGS

Record Drawing
Finished grades are shown on
Attachment A: Construction Survey
Record Plan

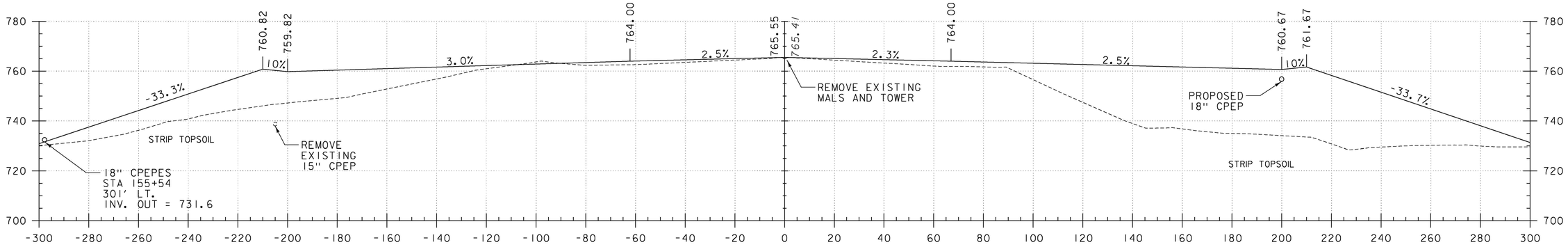

155+50

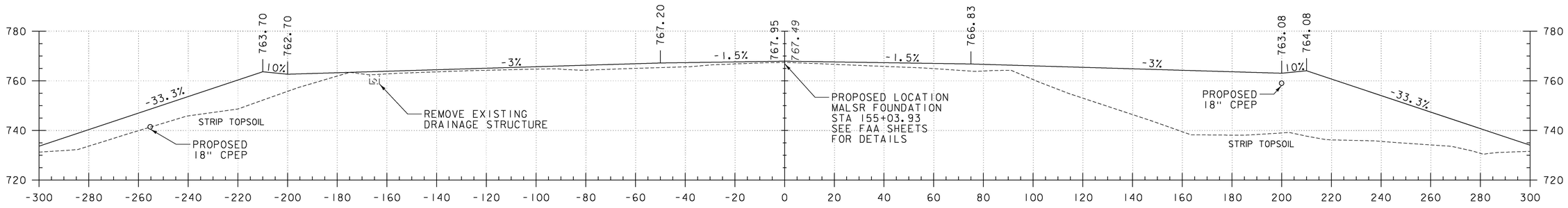

155+00

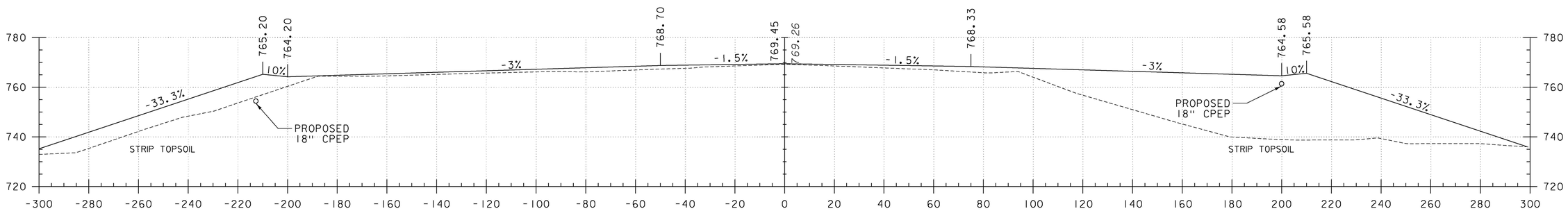

154+50

0 20 40
SCALE IN FEET

AIP 3-50-0015-34

VERMONT AGENCY OF TRANSPORTATION

STATE OF VERMONT
DAVID M. D'AMICO
No. 3673
REGISTERED
PROFESSIONAL ENGINEER

URS
URS CORPORATION
3 CORPORATE DRIVE, SUITE 203
CLIFTON PARK, NY 12065
(518) 688-0015

PROJECT NAME: RUTLAND SOUTHERN VERMONT REGIONAL AIRPORT
CLARENDON, VERMONT
PROJECT NUMBER: AV14-8018-300

FILE NAME: z07h124xs_rsa3.dgn
PROJECT LEADER: F. WALSH
DESIGNED BY: G. D'AMICO
RSA CROSS SECTIONS

PLOT DATE: 6/2/2013
DRAWN BY: M. KEMP
CHECKED BY:
SHEET 32 OF 36

6/2/2013
P:\CADD\Consultants\z07h124xs_rsa3.dgn

PROJECT RECORD DRAWINGS

Record Drawing
Finished grades are shown on
Attachment A: Construction Survey
Record Plan

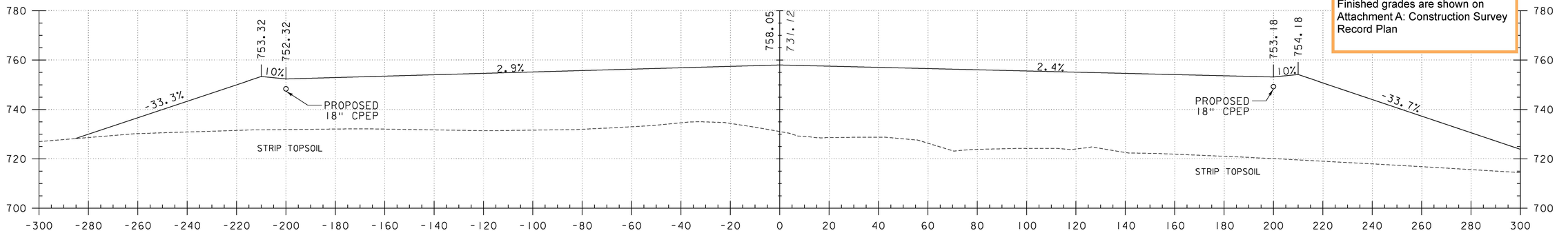

157+00

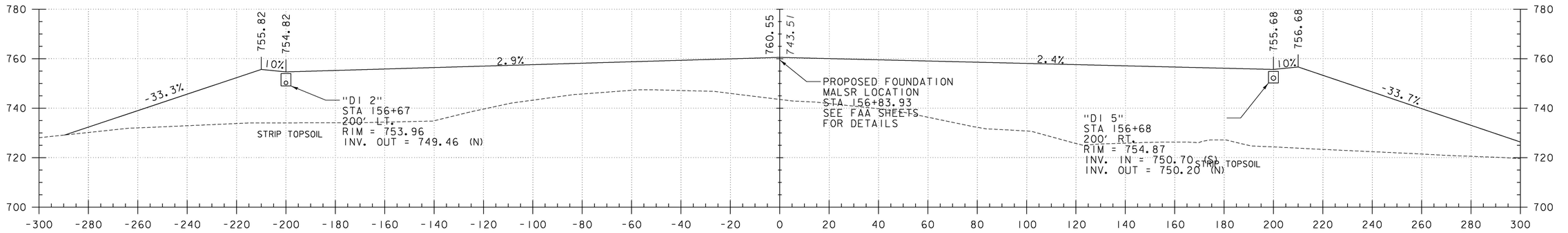

156+50

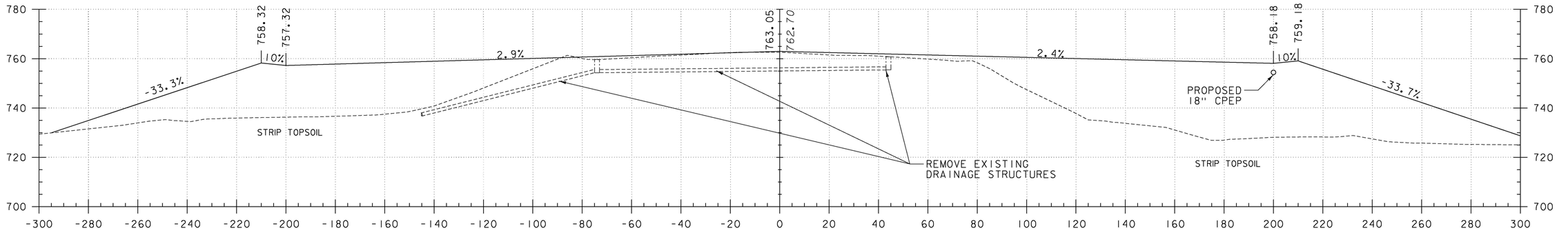

156+00

0 20 40
SCALE IN FEET

AIP 3-50-0015-34

VERMONT AGENCY OF TRANSPORTATION

URS
URS CORPORATION
3 CORPORATE DRIVE, SUITE 203
CLIFTON PARK, NY 12065
(518) 688-0015

STATE OF VERMONT
DONALD W. D'AMICO
No. 3873
REGISTERED
PROFESSIONAL ENGINEER

PROJECT NAME: RUTLAND SOUTHERN VERMONT REGIONAL AIRPORT
CLARENDON, VERMONT
PROJECT NUMBER: AV14-8018-300

FILE NAME: z07h124xs_rsa4.dgn
PROJECT LEADER: F. WALSH
DESIGNED BY: G. D'AMICO
RSA CROSS SECTIONS

PLOT DATE: 6/2/2013
DRAWN BY: M. KEMP
CHECKED BY:
SHEET 33 OF 36

6/2/2013
P:\CADD\Consultants\z07h124xs_rsa4.dgn

PROJECT RECORD DRAWINGS

Record Drawing
Finished grades are shown on
Attachment A: Construction Survey
Record Plan

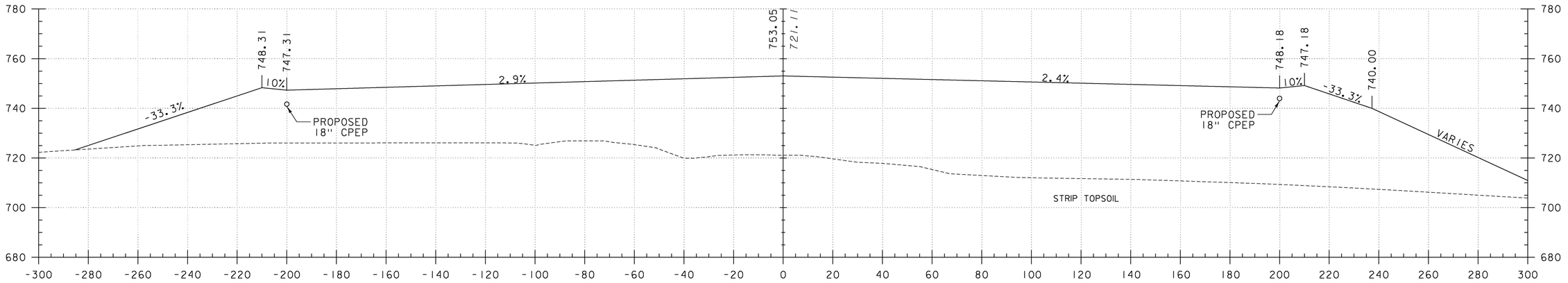

158+00

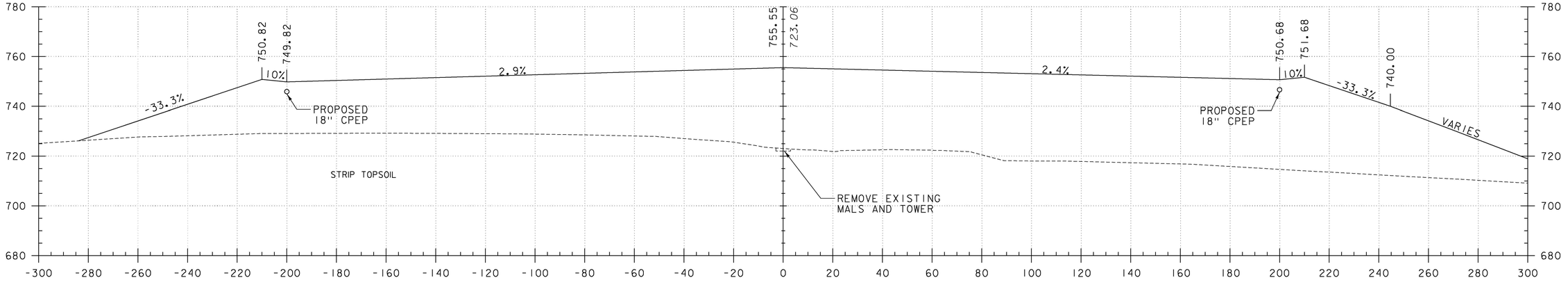

157+50

0 20 40
SCALE IN FEET

AIP 3-50-0015-34

VERMONT AGENCY OF TRANSPORTATION

STATE OF VERMONT
DONALD M. D'AMICO
No. 38734
REGISTERED
PROFESSIONAL ENGINEER

URS
URS CORPORATION
3 CORPORATE DRIVE, SUITE 203
CLIFTON PARK, NY 12065
(518) 688-0015

PROJECT NAME: RUTLAND SOUTHERN VERMONT REGIONAL AIRPORT
CLARENDON, VERMONT
PROJECT NUMBER: AV14-8018-300

FILE NAME: z07h124xs_rsa5.dgn
PROJECT LEADER: F. WALSH
DESIGNED BY: G. D'AMICO
RSA CROSS SECTIONS

PLOT DATE: 6/2/2013
DRAWN BY: M. KEMP
CHECKED BY:
SHEET 34 OF 36

6/2/2013
P:\CADD\Consultants\z07h124xs_rsa5.dgn

PROJECT RECORD DRAWINGS

Record Drawing
Finished grades are shown on Attachment A: Construction Survey Record Plan

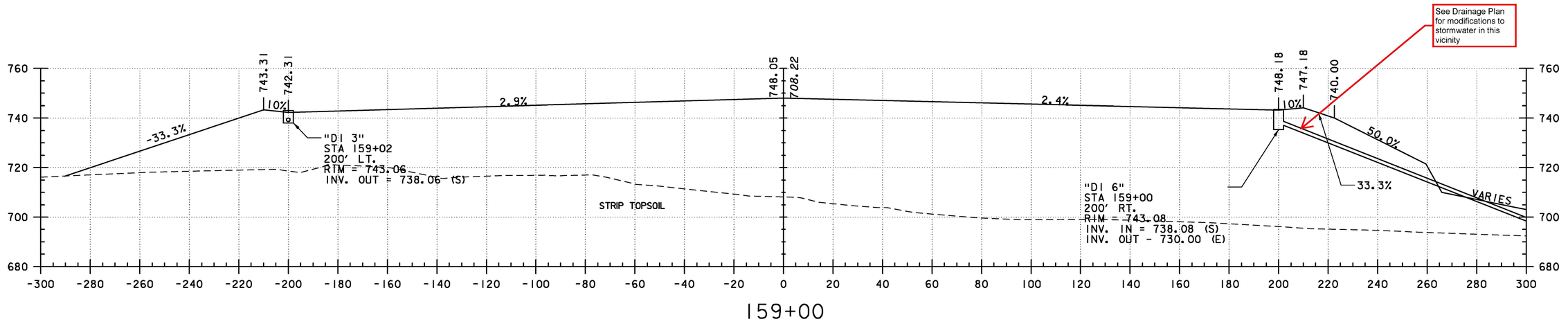

159+00

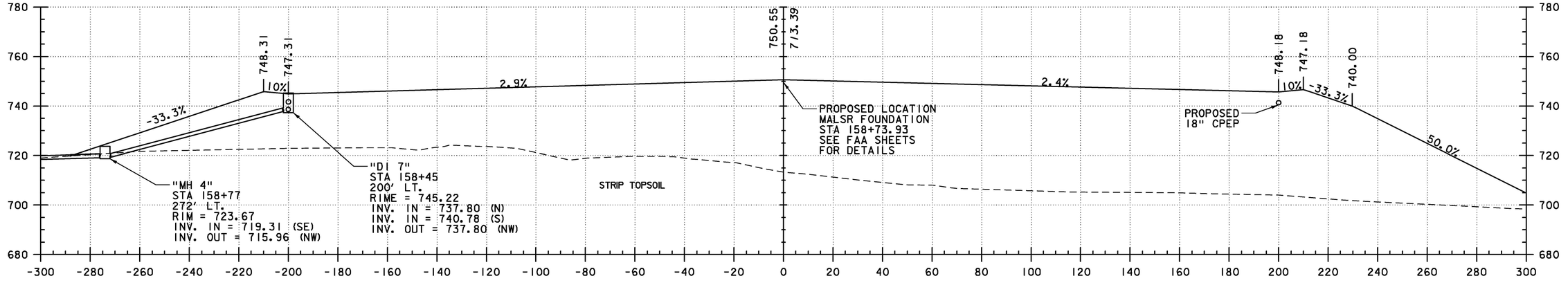

158+50

0 20 40
SCALE IN FEET

Addendum No. 2

AIP 3-50-0015-34

VERMONT AGENCY OF TRANSPORTATION

URS
URS CORPORATION
3 CORPORATE DRIVE, SUITE 203
CLIFTON PARK, NY 12065
(518) 688-0015

STATE OF VERMONT
DONALD W. D'AMICO
No. 3873
REGISTERED
PROFESSIONAL ENGINEER

PROJECT NAME: RUTLAND SOUTHERN VERMONT REGIONAL AIRPORT
CLARENDON, VERMONT
PROJECT NUMBER: AV14-8018-300

FILE NAME: z07h124xs_rsa6.dgn
PROJECT LEADER: F. WALSH
DESIGNED BY: G. D'AMICO
RSA CROSS SECTIONS

PLOT DATE: 6/13/2013
DRAWN BY: M. KEMP
CHECKED BY:
SHEET 35 OF 36

6/13/2013
P:\CADD\Consultants\z07h124xs_rsa6.dgn

PROJECT RECORD DRAWINGS

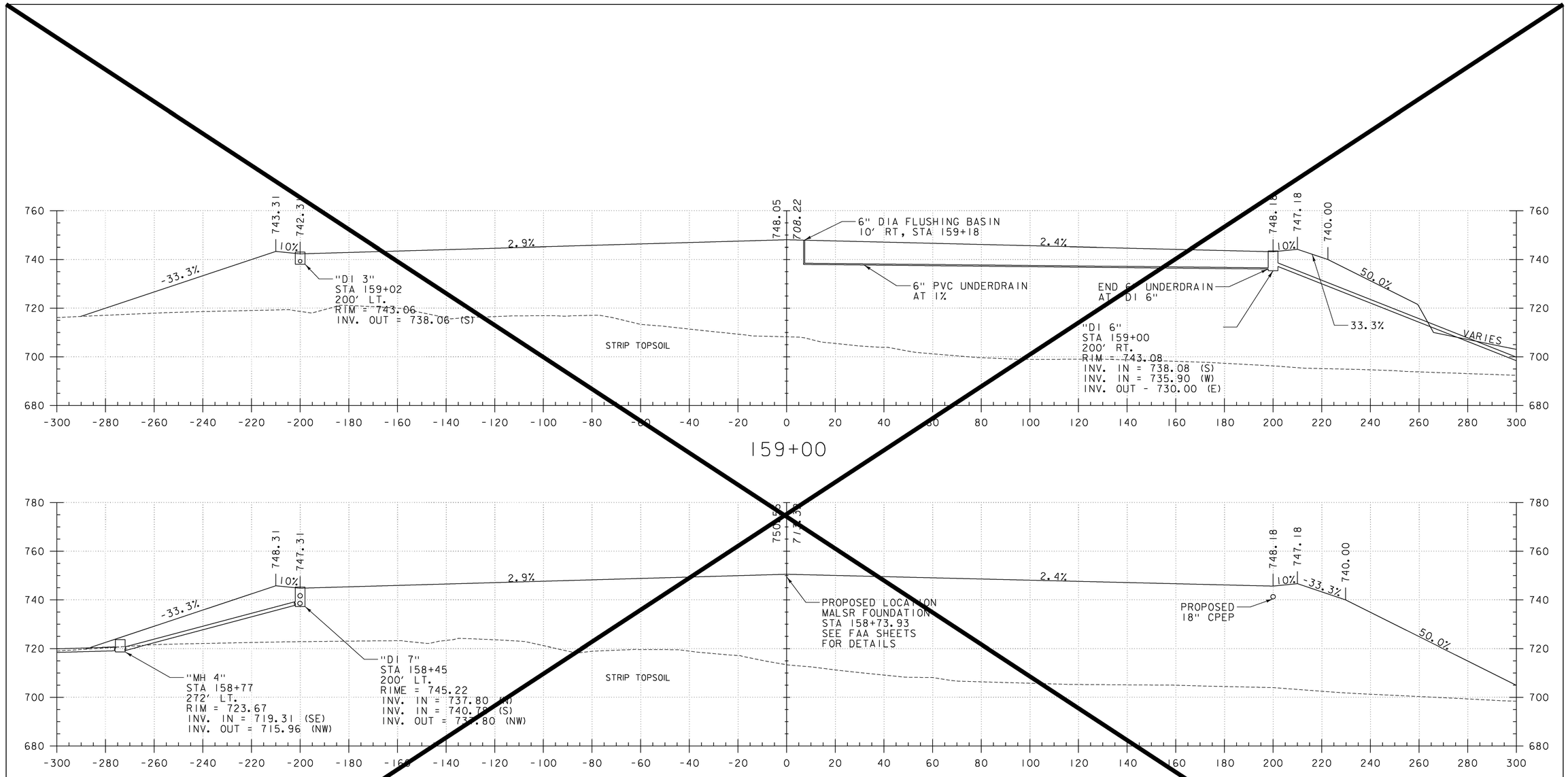

0 20 40
SCALE IN FEET

AIP 3-50-0015-34

6/2/2013
P:\CADD\Consultants\z07hl24xs_rsa6.dgn

VERMONT AGENCY OF TRANSPORTATION

URS
URS CORPORATION
3 CORPORATE DRIVE, SUITE 203
CLIFTON PARK, NY 12065
(518) 688-0015

STATE OF VERMONT
DONALD M. D'AMICO
No. 3873
REGISTERED
PROFESSIONAL ENGINEER

PROJECT NAME: RUTLAND SOUTHERN VERMONT REGIONAL AIRPORT
CLARENDON, VERMONT
PROJECT NUMBER: AV14-8018-300

FILE NAME: z07hl24xs_rsa6.dgn
PROJECT LEADER: F. WALSH
DESIGNED BY: G. D'AMICO
RSA CROSS SECTIONS

PLOT DATE: 6/2/2013
DRAWN BY: M. KEMP
CHECKED BY:
SHEET 35 OF 36

PROJECT RECORD DRAWINGS

Record Drawing
Finished grades are shown on
Attachment A: Construction Survey
Record Plan

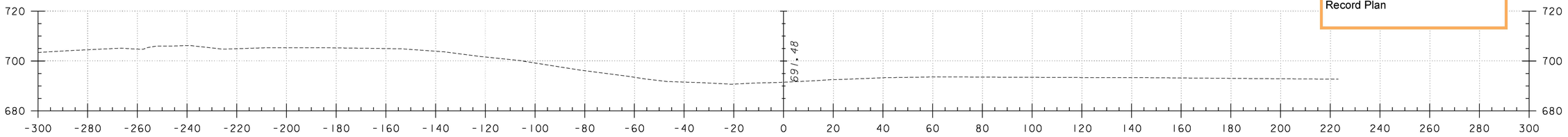

160+50

END CONSTRUCTION 160+50 +/-

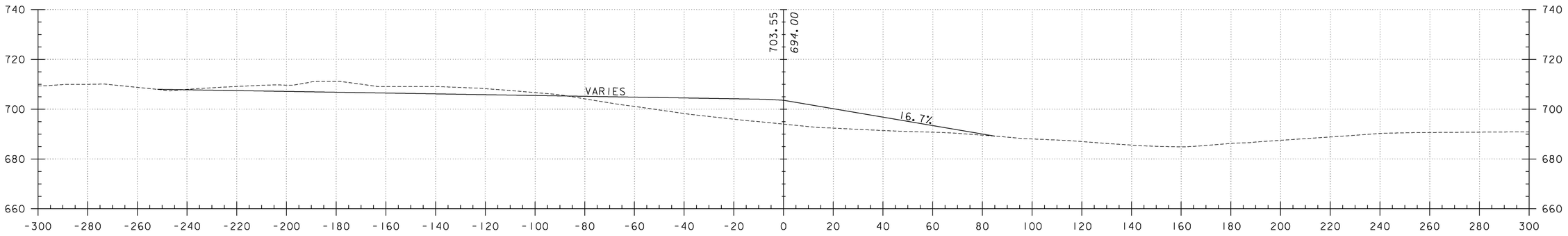

160+00

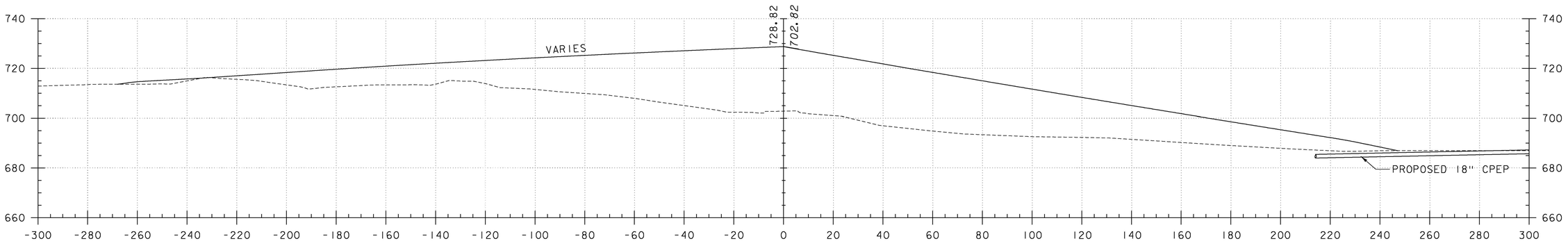

159+50

0 20 40
SCALE IN FEET

AIP 3-50-0015-34

VERMONT AGENCY OF TRANSPORTATION

URS
URS CORPORATION
3 CORPORATE DRIVE, SUITE 203
CLIFTON PARK, NY 12065
(518) 688-0015

STATE OF VERMONT · GERALD M. D'AMICO · No. 3873 · REGISTERED PROFESSIONAL ENGINEER

PROJECT NAME: RUTLAND SOUTHERN VERMONT REGIONAL AIRPORT
CLARENDON, VERMONT
PROJECT NUMBER: AV14-8018-300

FILE NAME: z07h124xs_rsa7.dgn	PLOT DATE: 6/2/2013
PROJECT LEADER: F. WALSH	DRAWN BY: M. KEMP
DESIGNED BY: G. D'AMICO	CHECKED BY:
RSA CROSS SECTIONS	SHEET 36 OF 36

PROJECT RECORD DRAWINGS

6/2/2013
P:\CADD\Consultants\z07h124xs_rsa7.dgn

TO SURVEY POINT 31

TO SURVEY POINT 31

VT STATE PLANE GRID

B.M. D Elev. 693.86
MAG NAIL 0.5' UP
IN POLE 7197
Based On NAVD 88

EXISTING RUNWAY APPROACH LIGHTS

STA 161+04.5
N 379661.87
E 1521079.47

PHASE II LIMIT OF DISTURBANCE

END OF RUNWAY
STA. 153+03.93
ELEV. 773.8

B.M. A Elev. 773.31
MAG NAIL @ N'W'LY CORNER
RUNWAY 19
Based On NAVD 88

RUNWAY BASELINE

N 1°09'56" W

151+00 152+00 153+00 154+00 155+00 156+00 157+00 158+00 159+00 160+00 161+00

APPROXIMATE CONSTRUCTION LIMITS

N 378634.62
E 1581679.26

N 26°07'12" W - 64

B.M. B Elev. 733.89
MAG NAIL 1' UP
POLE NET1463
Based On NAVD 88

TO SURVEY POINT 27

TO SURVEY POINT 27

LEGEND

- WETLAND LIMIT
- EXISTING FENCE
- STONE WALL
- BUSH
- R.O.W.
- PROPERTY LINE
- O.H. WIRES OVERHEAD WIRES
- SURVEY POINT
- 710 EXISTING CONTOUR W/ELEV.
- EXISTING INT. CONTOUR

STATE OF VERMONT
DONALD D'AMICO
No. 3873
REGISTERED
PROFESSIONAL ENGINEER

0 50 100
SCALE IN FEET

AIP 3-50-0015-34

VERMONT AGENCY OF TRANSPORTATION

URS
URS CORPORATION
3 CORPORATE DRIVE, SUITE 203
CLIFTON PARK, NY 12065
(518) 688-0015

PROJECT NAME: RUTLAND SOUTHERN VERMONT REGIONAL AIRPORT
CLARENDON, VERMONT
PROJECT NUMBER: AV14-8018-300

FILE NAME: z07h124ero_ecrsa.dgn
PROJECT LEADER: F. WALSH
DESIGNED BY: G. D'AMICO
EXISTING CONDITIONS PLAN-RSA

PLOT DATE: 6/2/2013
DRAWN BY: M. WASSON
CHECKED BY:
EC-1

PROJECT RECORD DRAWINGS

6/2/2013
P:\CADD\Consultants\z07h124ero_ecrsa.dgn

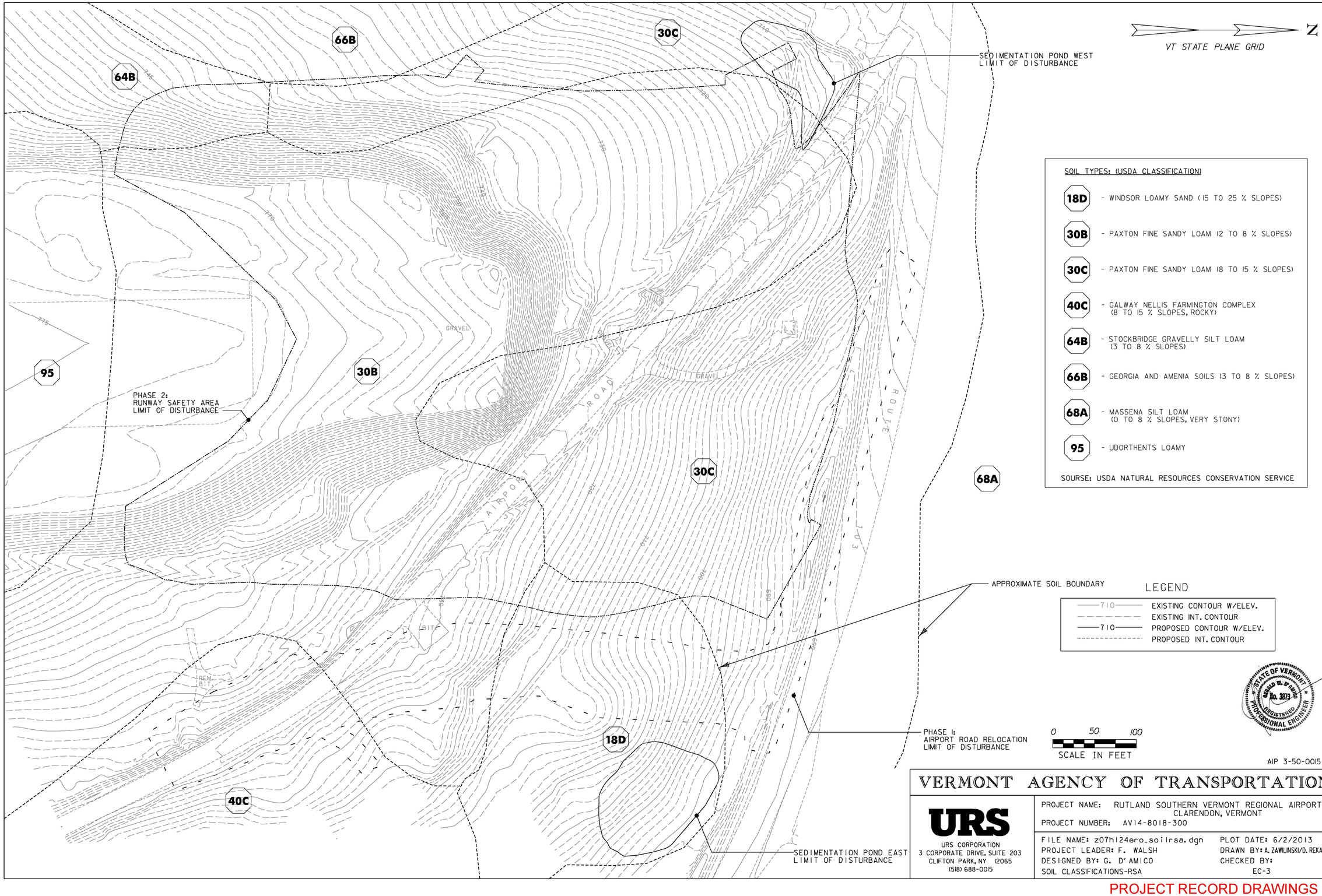

AIP 3-50-0015-34

VERMONT AGENCY OF TRANSPORTATION

URS
URS CORPORATION
3 CORPORATE DRIVE, SUITE 203
CLIFTON PARK, NY 12065
(518) 688-0015

PROJECT NAME: RUTLAND SOUTHERN VERMONT REGIONAL AIRPORT
CLARENDON, VERMONT
PROJECT NUMBER: AV14-8018-300

FILE NAME: z07h124ero_soilrsa.dgn
PROJECT LEADER: F. WALSH
DESIGNED BY: G. D'AMICO
SOIL CLASSIFICATIONS-RSA

PLOT DATE: 6/2/2013
DRAWN BY: A. ZAWILINSKI/D. REKAROVIC
CHECKED BY:
EC-3

6/2/2013
P:\CADD\Consultants\z07h124ero_soilrsa.dgn

PROJECT RECORD DRAWINGS

LEGEND

- 710 — EXISTING CONTOUR W/ELEV.
- EXISTING INT. CONTOUR
- 710 — PROPOSED CONTOUR W/ELEV.
- PROPOSED INT. CONTOUR
- EXISTING FENCE
- PROPOSED FENCE
- RUNWAY SAFETY AREA
- PDF — PDF — PDF — PROJECT DEMARCATION FENCE
- SILT FENCE
- TEST PITS
- B-6 SOIL BORINGS

VEHICHLE TRACKING PAD FOR CONSTRUCTION ACCESS B

SWEEP ROAD DAILY NOT A PAY ITEM

VT STATE PLANE GRID

FOR REFERENCE ONLY
NOT IN CONTRACT

PROPOSED FENCE

STATE OF VERMONT — GERARD M. D'AMICO — No. 3873 — REGISTERED PROFESSIONAL ENGINEER

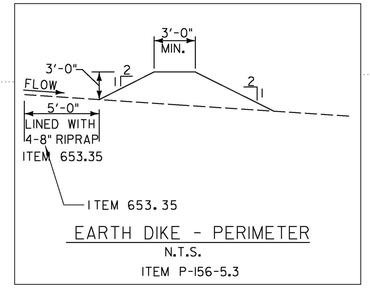

EARTH DIKE - PERIMETER
N.T.S.
ITEM P-156-5.3

INSTALL CHECK DAMS IN ROADSIDE DITCH. PLUG 24" RCP

NOTE:

DRAINAGE STRUCTURES TO BE PROTECTED WITH EROSION LOGS OR SILT FENCE UNTIL CONSTRUCTION PHASE HAS BEEN COMPLETED

PAYMENT FOR CLEANING SEDIMENTATION POND EAST WILL BE MADE UNDER ITEM 203.15 COMMON EXCAVATION.

PAYMENT FOR CLEANING THE PIPE CULVERTS USED FOR SEDIMENTATION CONTROL WILL BE MADE UNDER ITEM 601.996 CLEANING CULVERT PIPE, IN PLACE PER LINEAR FOOT.

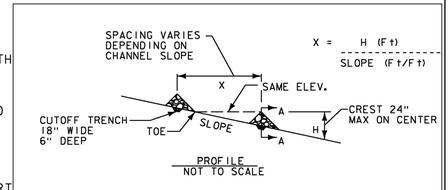

CHECK DAM
N.T.S.

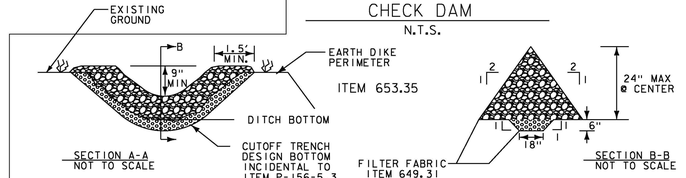

CONTRACTOR'S EQUIPMENT AREA A PHASE 1 AND 3

PROPOSED DI-12

PROPOSED DI-11

CONSTRUCT EARTH DIKE PERIMETER SEE DETAIL

CONSTRUCT 24" CPEP AND MH

CONSTRUCT 30" CPEP

CHECK DAMS CONSTRUCT AS NEEDED SEE DETAIL

STOCKPILED MATERIAL

CONSTRUCT EARTH DIKE

INSTALL AND CAP UNTIL PHASE 1 COMPLETED. SEE SHEET EC-10

INSTALL TEMPORARY SEDIMENTATION BASIN - E. SEE SHEET EC-10 AND STOCKPILE MATERIAL

SEE SHEET EC-10

VEHICLE TRACKING PAD FOR CONSTRUCTION ACCESS A CONTRACTOR TO MAINTAIN AS DIRECTED BY THE ENGINEER

CPEPES

ROCK OUTLET PROTECTION STONE FILL, TYPE I

ALL 2:1 SLOPES TO BE TEMPORARILY STABILIZED WITH DOUBLE NET EROSION CONTROL BLANKETS

0 50 100
SCALE IN FEET

AIP 3-50-0015-34

VERMONT AGENCY OF TRANSPORTATION

URS
URS CORPORATION
3 CORPORATE DRIVE, SUITE 203
CLIFTON PARK, NY 12065
(518) 688-0015

PROJECT NAME: RUTLAND SOUTHERN VERMONT REGIONAL AIRPORT
CLARENDON, VERMONT
PROJECT NUMBER: AV14-8018-300

FILE NAME: z07hl24sesc_1.dgn
PROJECT LEADER: F. WALSH
DESIGNED BY: G. D'AMICO
SOIL EROSION & SED. CONTROL PLAN PHASE 1

PLOT DATE: 6/2/2013
DRAWN BY: M. KEMP
CHECKED BY:
EC-5

6/2/2013
P:\CADD\Consultants\z07hl24sesc_1.dgn

PROJECT RECORD DRAWINGS

CONSTRUCT EARTH DIKE PERIMETER

EARTH DIKE - DIVERSION

CLEAR BRUSH

HAUL ROUTE

PROPOSED DISCHARGE POINT 2

INSTALL 60' 12" CPEP INV. IN 709 INV. OUT 704.5 AND TEMPORARY OUTLET STRUCTURE SEE EC - 10

CONSTRUCT TEMPORARY 12" DIA. CPEP CULVERT UNDERNEATH HAUL ROUTE

VEHICLE TRACKING PAD FOR CONSTRUCTION ACCESS B

SWEEP ROAD DAILY NOT A PAY ITEM

FENCE TO BE COMPLETED UNDER PHASE I

TEMPORARY SEDIMENTATION BASIN - W. SEE DETAIL SHEET EC-10.

BERM TO BE REMOVED UNDER PHASE I

RIP-RAP

INV.=735.6

INV.=736.7

CATCH BASIN GRATE=762.37 INV.=758.7

CATCH BASIN GRATE=759.25 INV.E=754.3 INV.W=754.3

MANHOLE RIM=762.31

MANHOLE RIM=762.56

MH(ELEC.) RIM=772.28

HMH(ELEC.) RIM=771.98

ELEC. METAL COVER

CATCH BASIN GRATE=758.38 INV.=755.4

GRAVEL

LIGHT

MANHOLE RIM=692.43

MANHOLE RIM=692.34

MANHOLE RIM=692.04

CONC. COVER

WOOD POLE

METAL POST

CONCRETE MONUMENT w/PIN

CONSTRUCT OUTLET STRUCTURE N ON 24" CULVERT. SEE DRAWING EC - 10 FOR DETAILS.

STOCKPILE CONSTRUCTED IN PHASE I

CHECK DAMS

CONSTRUCT EARTH DIKE PERIMETER

CONSTRUCT CHECK DAM, SEE DETAIL

GRADE TO DRAIN

CONTRACTOR TO MAINTAIN DITCH AND 24" CPEP

AIRPORT ROAD AND ROUTE 103 TURNLANE TO BE COMPLETED UNDER PHASE I

CONSTRUCT CHECK DAM SEE DETAIL

STOCKPILED MATERIAL

CONTRACTOR TO MAINTAIN EXISTING EMBANKMENT

CONTRACTOR TO MAINTAIN TEMPORARY SEDIMENTATION BASIN - E

70 LF-30" CPEP OUTLET TO BE LINED WITH STONE FILL TYPE I. PROPOSED DISCHARGE POINT I. SEE EC-10

TO BE COMPLETED UNDER PHASE I

ALL 2:1 SLOPES TO BE TEMPORARILY STABILIZED WITH DOUBLE NET EROSION CONTROL BLANKETS

RSA

RUNWAY SAFETY AREA

AIRPORT ROAD

ROUTE 103

VT STATE PLANE GRID

N

LEGEND

- 710 — EXISTING CONTOUR W/ELEV.
- EXISTING INT. CONTOUR
- 710 — PROPOSED CONTOUR W/ELEV.
- PROPOSED INT. CONTOUR
- EXISTING FENCE
- PROPOSED FENCE
- RSA — RUNWAY SAFETY AREA
- PDF — PDF — PDF — PROJECT DEMARCATION FENCE
- SILT FENCE
- TEST PITS
- B-6 — SOIL BORINGS

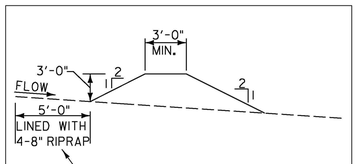

EARTH DIKE - PERIMETER
N.T.S.
(ITEM P-156-5.3)

NOTE:

DRAINAGE STRUCTURES TO BE PROTECTED WITH EROSION LOGS ON FILTER FABRIC UNTIL CONSTRUCTION PHASE HAS BEEN COMPLETED

CONTRACTOR TO MAINTAIN (CLEAN/REMOVE) SILT AND OTHER BUILD UP IN DRAINAGE WAYS, SEDIMENTATION BASINS, AND ROUTE 103 ROADSIDE DITCH AS DIRECTED BY THE ENGINEER. PAYMENT WILL BE MADE UNDER ITEM P-156-5.31

PAYMENT FOR CLEANING THE SEDIMENT BASINS WILL BE MADE UNDER ITEM P-152-4.1 UNCLASSIFIED EXCAVATION

PAYMENT FOR CLEANING THE CULVERTS USED FOR SEDIMENTATION CONTROL WILL BE MADE UNDER ITEM 601.996 CLEANING CULVERT PIPE, IN PLACE, PER LINEAR FOOT.

GRADING AND DRAINAGE FOR AIRPORT ROAD AND SEDIMENTATION POND EAST WILL BE CONSTRUCTED UNDER PHASE I

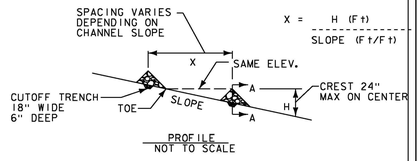

PROFILE
NOT TO SCALE

CHECK DAM
N.T.S.

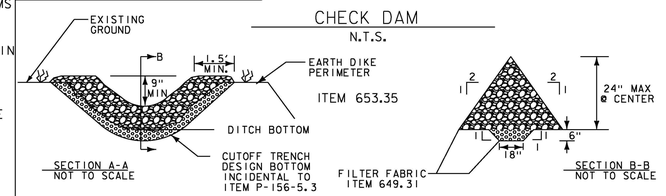

0 50 100
SCALE IN FEET

AIP 3-50-0015-34

STATE OF VERMONT — GERALD D'AMICO — No. 3873 — REGISTERED PROFESSIONAL ENGINEER

VERMONT AGENCY OF TRANSPORTATION

URS

URS CORPORATION
3 CORPORATE DRIVE, SUITE 203
CLIFTON PARK, NY 12065
(518) 688-0015

PROJECT NAME: RUTLAND SOUTHERN VERMONT REGIONAL AIRPORT CLARENDON, VERMONT

PROJECT NUMBER: AV14-8018-300

FILE NAME: z07h124sesc_2A.dgn
PLOT DATE: 6/2/2013
PROJECT LEADER: F. WALSH
DRAWN BY: M. KEMP
DESIGNED BY: G. D'AMICO
CHECKED BY:
SOIL EROSION & SED. CONTROL PLAN PHASE 2A
EC-6

6/2/2013
P:\CADD\Consultants\z07h124sesc_2A.dgn

PROJECT RECORD DRAWINGS

CONSTRUCT EARTH DIKE - PERIMETER SEE DETAIL

PROTECT TEMPORARY CULVERT UNDERNEATH HAUL ROUTE

VEHICLE TRACKING PAD FOR CONSTRUCTION ACCESS B CONTRACTOR TO MAINTAIN AS DIRECTED BY ENGINEER. SEE SHEET EC-11

HAUL ROUTE

CLEAR BRUSH

PHASE II LIMIT OF DISTURBANCE

CONTRACTOR TO MAINTAIN TEMPORARY SEDIMENTATION BASIN - W.

REMOVE EXISTING BERM

CONTRACTOR TO MAINTAIN ROADSIDE DITCH AND 24" CPEP

CONTRACTOR TO MAINTAIN EARTH DIKE PERIMETER

AIRPORT ROAD AND ROUTE 103 TURNLANE TO BE COMPLETED UNDER PHASE I

GRADE TO DRAIN D1-11

SEE SHEET EC-10 FOR PIPE DETAILS

STOCKPILED MATERIAL

CONTRACTOR TO MAINTAIN EXISTING EMBANKMENT

CONTRACTOR TO MAINTAIN TEMPORARY SEDIMENTATION BASIN - E AND 70 LF 30" CPEP.

TO BE COMPLETED UNDER PHASE I

Z

VT STATE PLANE GRID

NOTE:

DRAINAGE STRUCTURES TO BE PROTECTED WITH HAY BALES AND FILTER FABRIC UNTIL CONSTRUCTION PHASE HAS BEEN COMPLETED

CONTRACTOR TO MAINTAIN (CLEAN/REMOVE) SILT AND OTHER BUILD UP IN DRAINAGE WAYS AS DIRECTED BY THE ENGINEER

PAYMENT FOR CLEANING SEDIMENTATION PONDS WILL BE MADE UNDER ITEM P-152-4.1 UNCLASSIFIED EXCAVATION

PAYMENT FOR CLEANING THE PIPE CULVERTS USED FOR SEDIMENTATION CONTROL WILL BE MADE UNDER ITEM 601.996 CLEANING CULVERT PIPE, IN PLACE PER LINEAR FOOT

GRADING AND DRAINGE FOR AIRPORT ROAD AND SEDIMENTATION POND EAST WILL BE CONSTRUCTED UNDER PHASE I

MAXIMUM ALLOWABLE DISTURBED AREA AT ANY TIME IS 10 ACRES. CONTRACTOR TO SCHEDULE HIS WORK SUCH THAT NO MORE THAN 10 ACRES IS DISTURBED AT ANY TIME. PLACEMENT AND ACCEPTANCE OF SOIL STABILIZATION (TOPSOIL, SEED, MULCH AND EROSION CRONTROL MATTING) WILL CONSTITUTE AN UNDISTURBED CONDITION.

IN THE EVENT THE PROJECT MUST BE SHUT DOWN, ALL EXPOSED AREAS ARE TO BE SEEDED AND MULCHED. CONTRACTOR TO PROVIDE POSITIVE DRAINAGE.

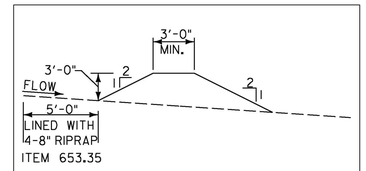

EARTH DIKE - PERIMETER
N.T.S.
(ITEM P-156-5.3)

LEGEND

710	EXISTING CONTOUR W/ELEV.
	EXISTING INT. CONTOUR
710	PROPOSED CONTOUR W/ELEV.
	PROPOSED INT. CONTOUR
	EXISTING FENCE
	PROPOSED FENCE
RSA	RUNWAY SAFETY AREA
PDF PDF PDF	PROJECT DEMARCATION FENCE
	SILT FENCE
	TEST PITS
B-6	SOIL BORINGS

0 50 100
SCALE IN FEET

AIP 3-50-0015-34

VERMONT AGENCY OF TRANSPORTATION

URS
URS CORPORATION
3 CORPORATE DRIVE, SUITE 203
CLIFTON PARK, NY 12065
(518) 688-0015

PROJECT NAME: RUTLAND SOUTHERN VERMONT REGIONAL AIRPORT
CLARENDON, VERMONT
PROJECT NUMBER: AV14-8018-300

FILE NAME: z07h124sesc_2B.dgn
PROJECT LEADER: F. WALSH
DESIGNED BY: G. D'AMICO
PLOT DATE: 6/2/2013
DRAWN BY: M. KEMP
CHECKED BY:
SOIL EROSION & SED. CONTROL PLAN PHASE 2B
EC-7

STATE OF VERMONT
DONALD W. D'AMICO
No. 3873
REGISTERED
PROFESSIONAL ENGINEER

6/2/2013
P:\CADD\Consultants\z07h124sesc_2B.dgn

PROJECT RECORD DRAWINGS

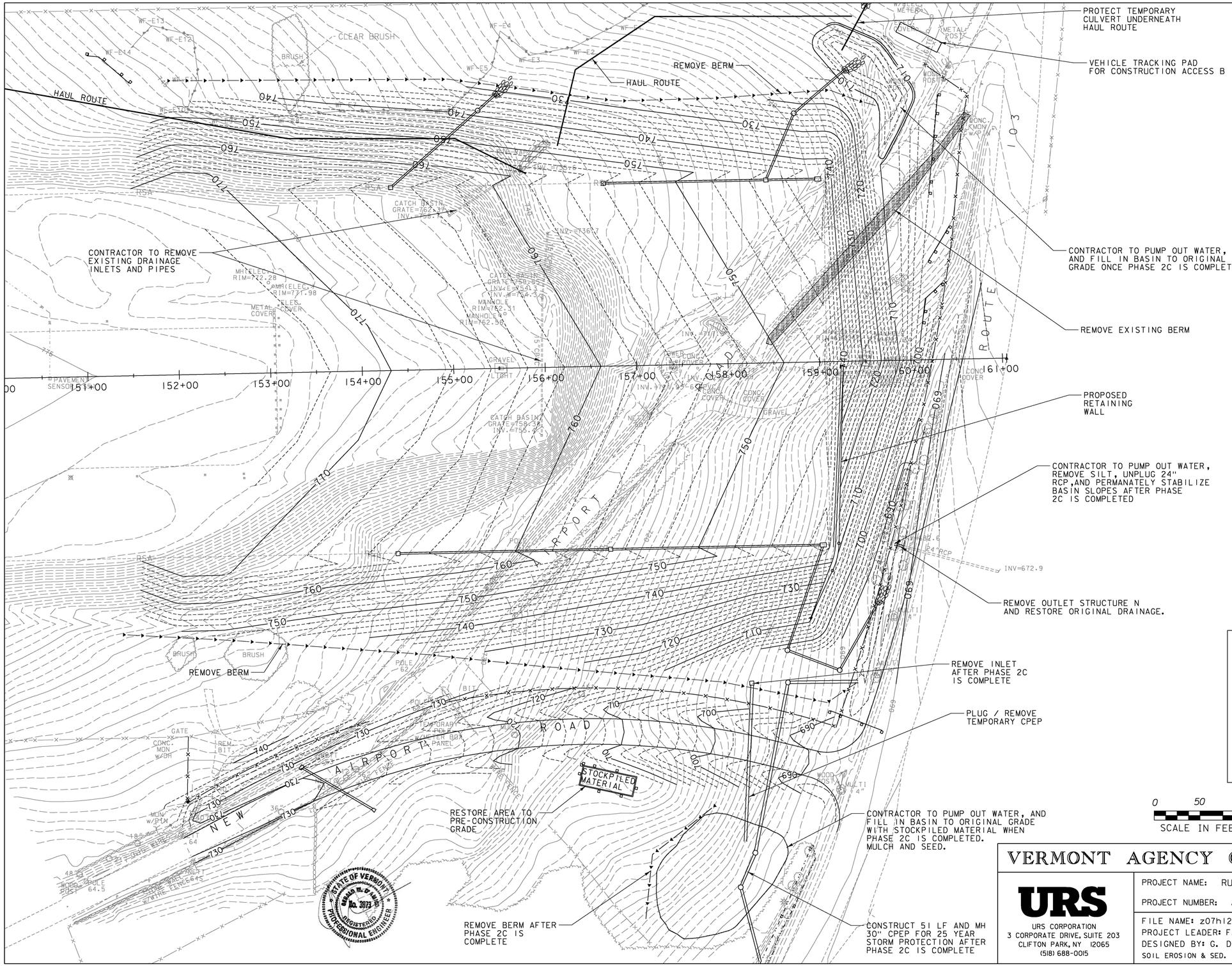

VT STATE PLANE GRID

NOTE:

DRAINAGE STRUCTURES TO BE PROTECTED WITH HAY BALES AND FILTER FABRIC UNTIL CONSTRUCTION PHASE HAS BEEN COMPLETED

CONTRACTOR TO MAINTAIN (CLEAN/REMOVE) SILT AND OTHER BUILD UP IN DRAINAGE WAYS AS DIRECTED BY THE ENGINEER

PAYMENT FOR CLEANING SEDIMENTATION PONDS WILL BE MADE UNDER ITEM P-152-4.1 UNCLASSIFIED EXCAVATION

PAYMENT FOR CLEANING THE PIPE CULVERTS USED FOR SEDIMENTATION CONTROL WILL BE MADE UNDER ITEM 601.996 CLENAING CULVERT PIPE, IN PLACE PER LINEAR FOOT

SEE SHEET__ FOR DRAINAGE PROFILES AND DETAILS

MAXIMUM ALLOWABLE DISTURBED AREA AT ANY TIME IS 10 ACRES. CONTRACTOR TO SCHEDULE HIS WORK BETWEEN THE BORROW AREA AND THE RSA EMBANKMENT SUCH THAT NO MORE THAN 10 ACRES IS DISTURED AT ANY TIME. PLACEMENT AND ACCEPTANCE OF SOIL STABILIZATION (TOPSOIL, SEED, MULCH, AND EROSION CONTROL MATTING) WILL CONSTITUTE AN UNDISTURBED CONDITION.

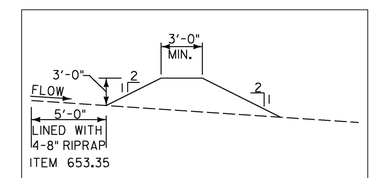

EARTH DIKE - PERIMETER
N.T.S.
(ITEM P-156-5.3)

LEGEND

710	EXISTING CONTOUR W/ELEV.
	EXISTING INT. CONTOUR
710	PROPOSED CONTOUR W/ELEV.
	PROPOSED INT. CONTOUR
	EXISTING FENCE
	PROPOSED FENCE
RSA	RUNWAY SAFETY AREA
PDF	PROJECT DEMARCATION FENCE
	SILT FENCE
	TEST PITS
B-6	SOIL BORINGS

0 50 100
SCALE IN FEET

AIP 3-50-0015-34

VERMONT AGENCY OF TRANSPORTATION

URS
URS CORPORATION
3 CORPORATE DRIVE, SUITE 203
CLIFTON PARK, NY 12065
(518) 688-0015

PROJECT NAME: RUTLAND SOUTHERN VERMONT REGIONAL AIRPORT CLARENDON, VERMONT
PROJECT NUMBER: AV14-8018-300

FILE NAME: z07h124sesc_2C.dgn
PLOT DATE: 6/2/2013
PROJECT LEADER: F. WALSH
DRAWN BY: M. KEMP
DESIGNED BY: G. D'AMICO
CHECKED BY:
SOIL EROSION & SED. CONTROL PLAN PHASE 2C
EC-8

6/2/2013
P:\CADD\Consultants\z07h124sesc_2C.dgn

PROJECT RECORD DRAWINGS

OUTLET STRUCTURE FOR ROUTE 103 CULVERT AT STATION 232+50

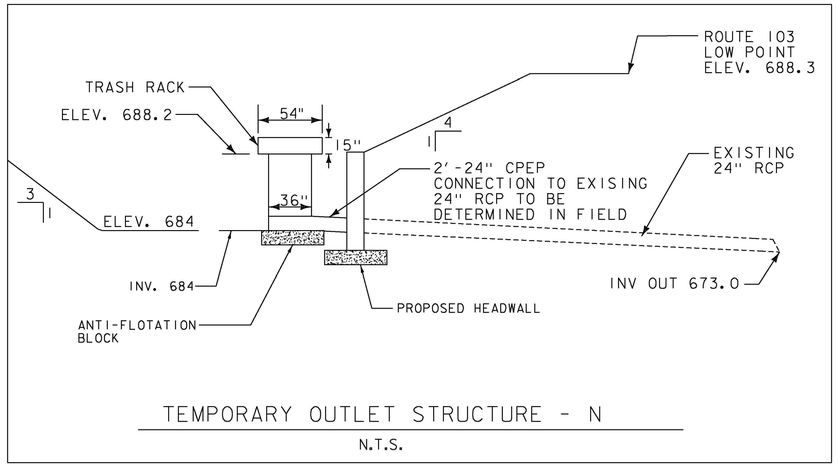

TEMPORARY OUTLET STRUCTURE - N

N.T.S.

NOTES:

SEDIMENTATION BASIN SIZE IS BASED ON 10 YEAR STORM.

OUTLET STRUCTURE ON ROUTE 103 CULVERT IS UTILIZED DURING CONSTRUCTION TO MAINTAIN THE INTEGREITY OF SEDIMENTATION BASIN EAST

CONTRACTOR TO MAINTAIN SIDE SLOPES NO STEEPER THAN 3:1 UNTIL GRADE IS TEMPORARILY OR PERMANENTLY STABILIZED.

TRASH RACK SHALL BE CONSTRUCTED BASED ON FIGURE 5.17, CONCENTRIC TRASH RACK AND ANTI-VORTEX DEVICE, IN VERMONT STANDARDS AND SPECIFICATIONS FOR EROSION PREVENTION AND SEDIMENT CONTROL MANUAL.

TRASH RACKS WILL BE PAID FOR AS 2 LF OF 36" CPEP

ANTI-FLOTATION BLOCK AND ANTI-SEEP COLLAR ARE INCIDENTAL TO PIPE ITEMS

SEDIMENTATION BASIN WILL BE STABILIZED BEFORE OCTOBER 15TH.

PAYMENT FOR REMOVING SILT FROM SED PONDS TO BE PAID FOR UNDER ITEM P-156-5.3

SEDIMENTATION BASIN WEST

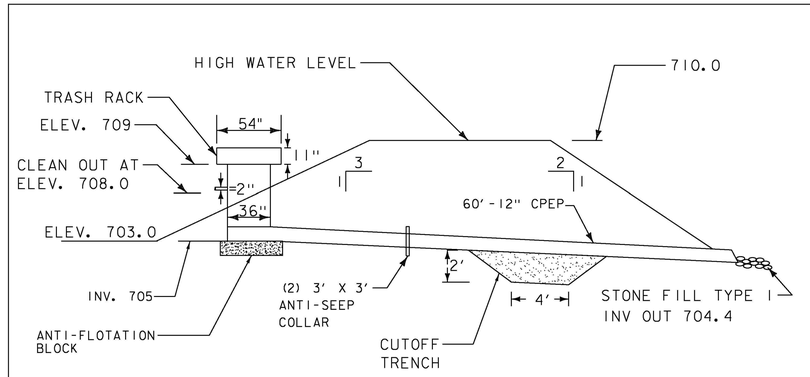

TEMPORARY SEDIMENTATION BASIN - W

N.T.S.

TEMPORARY AIRPORT ROAD CULVERT (COMPLETED UNDER PHASE 1)

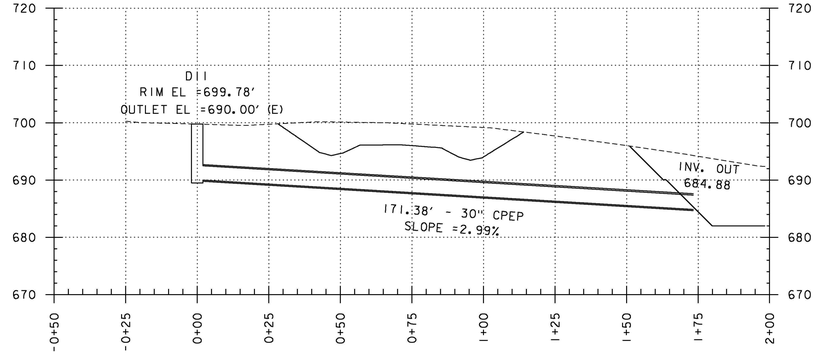

LINE	SURFACE	OFFSET
-------	EXISTING	0.00
———	AIRPORT_ROAD	0.00
———	Sed Pond East	0.00
Scaled	2.0000	Times Ver.
Scaled	1.0000	Times Hor.

ROADSIDE DITCH TO SEDIMENTATION BASIN EAST (COMPLETED UNDER PHASE 1)

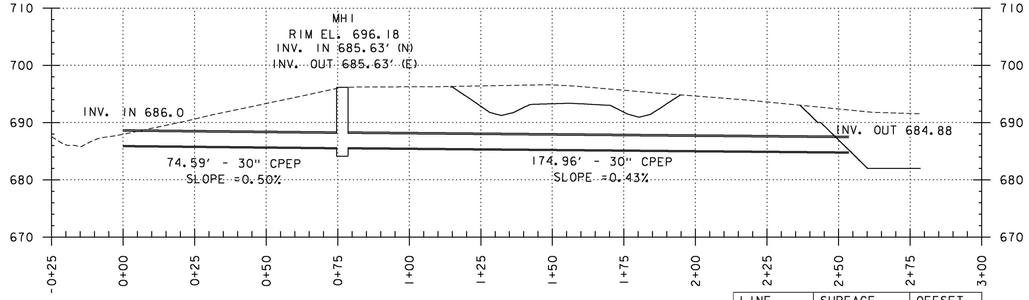

LINE	SURFACE	OFFSET
-------	EXISTING	0.00
———	AIRPORT_ROAD	0.00
———	Sed Pond East	0.00
Scaled	2.0000	Times Ver.
Scaled	1.0000	Times Hor.

AIP 3-50-0015-34

STATE OF VERMONT
DONALD W. D'AMICO
No. 3873
REGISTERED
PROFESSIONAL ENGINEER

VERMONT AGENCY OF TRANSPORTATION

URS
URS CORPORATION
3 CORPORATE DRIVE, SUITE 203
CLIFTON PARK, NY 12065
(518) 688-0015

PROJECT NAME: RUTLAND SOUTHERN VERMONT REGIONAL AIRPORT
CLARENDON, VERMONT
PROJECT NUMBER: AV14-8018-300

FILE NAME: z07hl24detail_sesc.dgn
PLOT DATE: 6/2/2013
PROJECT LEADER: F. WALSH
DRAWN BY: M. KEMP
DESIGNED BY: G. D'AMICO
CHECKED BY:
SOIL EROSION & SEDIMENT CONTROL PLAN-DETAIL
EC-10

PROJECT RECORD DRAWINGS

6/2/2013
P:\CADD\Consultants\z07hl24detail_sesc.dgn

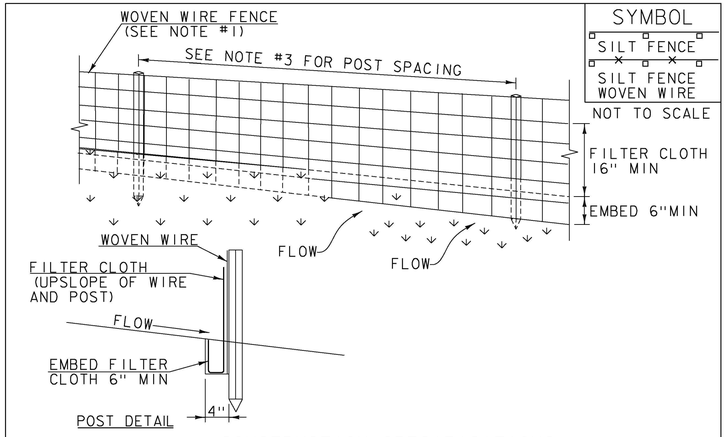

CONSTRUCTION SPECIFICATIONS

1. WOVEN WIRE REINFORCED FENCE IS REQUIRED WITHIN 100' UPSLOPE OF RECEIVING WATERS WHEN THE PROJECT FALLS UNDER A CONSTRUCTION STORMWATER PERMIT. WOVEN WIRE SHALL BE A MIN. 14 GAUGE WITH A 6" MAX. MESH OPENING.
2. FILTER CLOTH SHALL BE EITHER FILTER X, MIRAFI100X, STABILINKA T140N OR APPROVED EQUIVALENT.
3. POST SPACING FOR WIRE-BACKED FENCE SHALL BE 10' MAXIMUM. FOR FILTER-CLOTH FENCE, WHEN ELONGATION IS >50%, POST SPACING SHALL NOT EXCEED 4' AND WHEN ELONGATION IS <50%, POST SPACING SHALL NOT EXCEED 6'.
4. WOVEN WIRE FENCE IS TO BE FASTENED SECURELY TO FENCE POSTS WITH WIRE TIES. FILTER CLOTH IS TO BE FASTENED SECURELY TO WOVEN WIRE FENCE WITH TIES SPACED EVERY 24" AT TOP AND MID SECTION.
5. WHEN TWO SECTIONS OF FILTER CLOTH ADJOIN EACH OTHER THEY SHALL BE OVER-LAPPED BY 6" AND FOLDED.
6. MAINTENANCE SHALL BE PERFORMED AS NEEDED AND MATERIAL REMOVED WHEN SEDIMENT REACHES HALF OF FABRIC HEIGHT.

ADAPTED FROM DETAILS PROVIDED BY: NEW YORK STATE DEC
ORIGINALLY DEVELOPED BY USDA-NRCS
VERMONT DEPARTMENT OF ENVIRONMENTAL CONSERVATION

SILT FENCE

NOTES:
REFER TO "THE VERMONT STANDARDS & SPECIFICATIONS FOR EROSION PREVENTION & SEDIMENT CONTROL -2006- "FROM THE VT AGENCY OF NATURAL RESOURCES FOR ADDITIONAL GUIDANCE.

THIS WORK SHALL BE PERFORMED IN ACCORDANCE WITH SECTION 649 AND AS SHOWN IN THE PLANS FOR GEOTEXTILE FOR SILT FENCE (PAY ITEM 649.51)

REVISIONS	
MARCH 21, 2008	WHF
DECEMBER 11, 2008	WHF
JANUARY 13, 2009	WHF

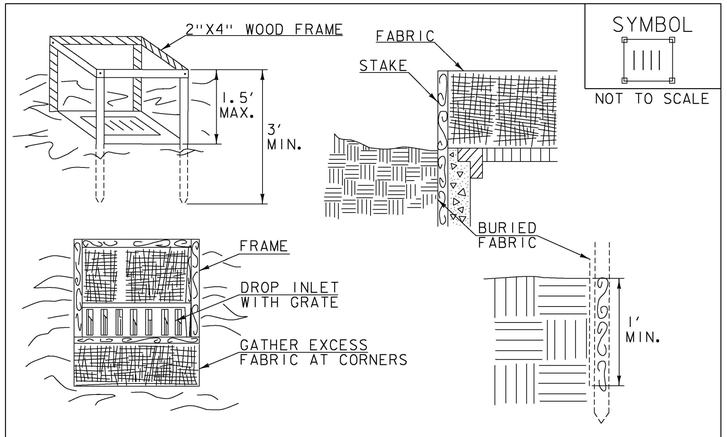

CONSTRUCTION SPECIFICATIONS

1. FILTER FABRIC SHALL HAVE AN APPARENT OPENING SIZE OF 40-85. BURLAP MAY BE USED FOR SHORT TERM APPLICATIONS.
2. CUT FABRIC FROM A CONTINUOUS ROLL TO ELIMINATE JOINTS. IF JOINTS ARE NEEDED THEY WILL BE OVERLAPPED TO THE NEXT STAKE.
3. STAKE MATERIALS WILL BE STANDARD 2"x 4" WOOD OR EQUIVALENT METAL WITH A MINIMUM LENGTH OF 3'.
4. SPACE STAKES EVENLY AROUND INLET 3' APART AND DRIVE A MINIMUM 18" DEEP. SPANS GREATER THAN 3' MAY BE BRIDGED WITH THE USE OF WIRE MESH BEHIND THE FILTER FABRIC FOR SUPPORT.
5. FABRIC SHALL BE EMBEDDED 1' MINIMUM BELOW GROUND AND BACKFILLED. IT SHALL BE SECURELY FASTENED TO THE STAKES AND FRAME.
6. A 2" x 4" WOOD FRAME SHALL BE COMPLETED AROUND THE CREST OF THE FABRIC FOR OVER FLOW STABILITY.
7. MAXIMUM DRAINAGE AREA 1 ACRE

ADAPTED FROM DETAILS PROVIDED BY: NEW YORK STATE DEC
ORIGINALLY DEVELOPED BY USDA-NRCS
VERMONT DEPARTMENT OF ENVIRONMENTAL CONSERVATION

FILTER FABRIC DROP INLET PROTECTION

NOTES:
REFER TO "THE VERMONT STANDARDS & SPECIFICATIONS FOR EROSION PREVENTION & SEDIMENT CONTROL -2006- "FROM THE VT AGENCY OF NATURAL RESOURCES FOR ADDITIONAL GUIDANCE.

THIS WORK SHALL BE PERFORMED IN ACCORDANCE WITH SECTION 653 FOR INLET PROTECTION DEVICE, TYPE I PAID FOR UNDER 649.51 GEOTEXTILE FOR SILT FENCE. THE COST OF CONSTRUCTING THE 2"x 4" FRAME IS INCIDENTAL TO ITEM 649.51.

REVISIONS	
MARCH 7, 2008	WHF
JANUARY 13, 2009	WHF

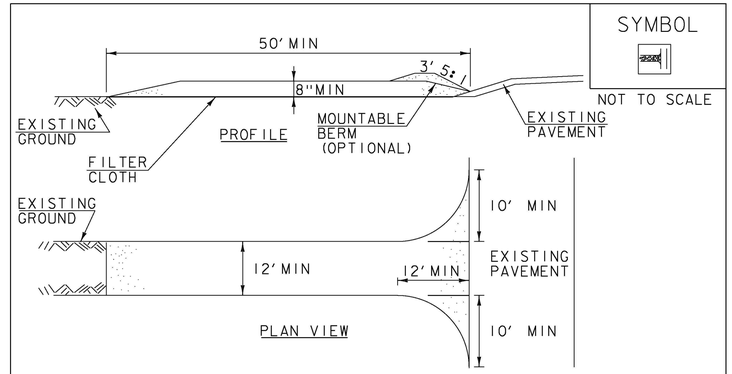

CONSTRUCTION SPECIFICATIONS

1. STONE SIZE- USE 1-4" STONE, RECLAIMED OR RECYCLED CONCRETE EQUIVALENT.
2. LENGTH- NOT LESS THAN 50' (EXCEPT ON A SINGLE RESIDENCE LOT WHERE A 30' MINIMUM LENGTH APPLIES).
3. THICKNESS- NOT LESS THAN 8".
4. WIDTH- 12' MINIMUM, BUT NOT LESS THAN THE FULL WIDTH AT POINTS WHERE INGRESS OR EGRESS OCCURS. 24' IF SINGLE ENTRANCE TO SITE.
5. GEOTEXTILE MUST BE PLACED OVER THE ENTIRE AREA PRIOR TO PLACING STONE.
6. SURFACE WATER- ALL SURFACE WATER FLOWING OR DIVERTED TOWARD CONSTRUCTION ENTRANCES SHALL BE PIPED BENEATH THE ENTRANCE. IF PIPING IS IMPRACTICAL, A MOUNTABLE BERM WITH 5:1 SLOPES WILL BE PERMITTED.
7. MAINTENANCE- THE ENTRANCE SHALL BE MAINTAINED IN A CONDITION WHICH WILL PREVENT TRACKING OR FLOWING OF SEDIMENT ONTO PUBLIC RIGHTS-OF-WAY, ALL SEDIMENT SPILLED, DROPPED, WASHED OR TRACKED ONTO PUBLIC RIGHTS-OF-WAY MUST BE REMOVED IMMEDIATELY.
8. WHEN WASHING IS REQUIRED, IT SHALL BE DONE ON AN AREA STABILIZED WITH STONE AND WHICH DRAINS INTO AN APPROVED SEDIMENT TRAPPING DEVICE.
9. PERIODIC INSPECTION AND NEEDED MAINTENANCE SHALL BE PROVIDED ACCORDING TO PERMIT REQUIREMENTS.

ADAPTED FROM DETAILS PROVIDED BY: NEW YORK STATE DEC
ORIGINALLY DEVELOPED BY USDA-NRCS
VERMONT DEPARTMENT OF ENVIRONMENTAL CONSERVATION

STABILIZED CONSTRUCTION ENTRANCE

NOTES:
REFER TO "THE VERMONT STANDARDS & SPECIFICATIONS FOR EROSION PREVENTION & SEDIMENT CONTROL -2006- "FROM THE VT AGENCY OF NATURAL RESOURCES FOR ADDITIONAL GUIDANCE.

THIS WORK SHALL BE PERFORMED IN ACCORDANCE WITH SECTION 653 FOR VEHICLE TRACKING PAD (PAY ITEM 653.35) OR AS SPECIFIED IN THE CONTRACT.

REVISIONS	
MARCH 24, 2008	WHF
JANUARY 13, 2009	WHF

NOTE: PAYMENT FOR MAINTAING THE STABILIZED CONSTRUCTION ENTRANCE, INCLUDING REMOVING SOIL, MUD, OR OTHER MATERIALS TRACKED ONTO THE HIGHWAY, OR REPLACING THE STABILIZED CONSTRUCTION ENTRANCE IF NECESSARY, WHEN DIRECTED BY THE ENGINEER, SHALL BE INCIDENTAL TO ITEM 653.35.

AIP 3-50-0015-34

STATE OF VERMONT
DONALD W. D'AMBRA
No. 3873
REGISTERED
PROFESSIONAL ENGINEER

VERMONT AGENCY OF TRANSPORTATION

URS
URS CORPORATION
3 CORPORATE DRIVE, SUITE 203
CLIFTON PARK, NY 12065
(518) 688-0015

PROJECT NAME: RUTLAND SOUTHERN VERMONT REGIONAL AIRPORT
CLARENDON, VERMONT
PROJECT NUMBER: AV14-8018-300

FILE NAME: z07hl24ero_det2.dgn
PROJECT LEADER: F. WALSH
DESIGNED BY: CONST. ENV. SECTION
EROSION PREVENTION & SEDIMENT CONTROL DETAILS (I)
PLOT DATE: 6/2/2013
DRAWN BY: M. WASSON
CHECKED BY:
EC-11

PROJECT RECORD DRAWINGS

6/2/2013
P:\CADD\Consultants\z07hl24ero_det2.dgn

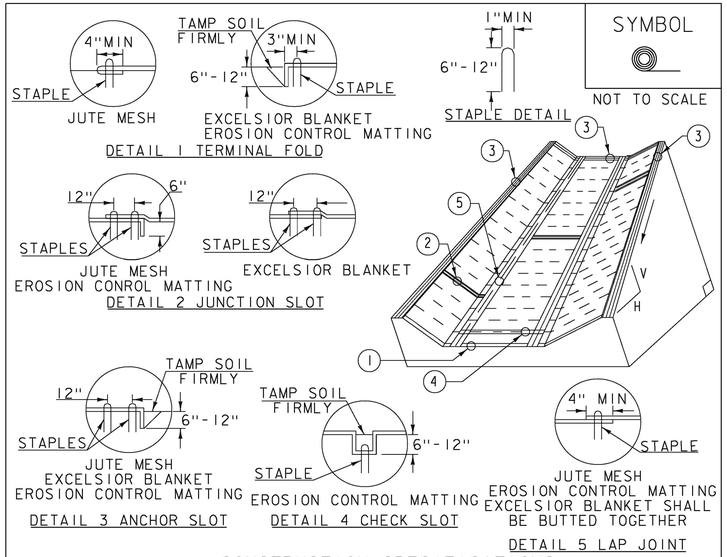

SYMBOL

NOT TO SCALE

CONSTRUCTION SPECIFICATIONS

1. EROSION MATTING, CHECK SLOTS, SHALL BE SPACED IN DITCH CHANNEL SO THAT ONE OCCURS WITHIN EACH 50' ON SLOPES OF MORE THAN 4% AND LESS THAN 6%. ON SLOPES OF 6% OR MORE, THEY SHALL BE SPACED SO THAT ONE OCCURS WITHIN EACH 25'.

2. APPLY FERTILIZER, LIME SEED PRIOR TO PLACING MATTING.

3. STAPLES ARE TO BE PLACED ALTERNATELY, IN COLUMNS APPROXIMATELY 2' APART AND IN ROWS APPROXIMATELY 3' APART. APPROXIMATELY 175 STAPLES ARE REQUIRED PER 4'X225' ROLL OF MATERIAL AND 125 STAPLES ARE REQUIRED PER 4'X150' ROLL OF MATERIAL.

4. DISTURBED AREAS SHALL BE SMOOTHLY GRADED. EROSION CONTROL MATERIAL SHALL BE PLACED LOOSELY OVER GROUND SURFACE. DO NOT STRETCH.

5. ALL TERMINAL ENDS AND TRANSVERSE LAPS SHALL BE STAPLED AT APPROXIMATELY 12" INTERVALS.

ADAPTED FROM DETAILS PROVIDED BY: NEW YORK STATE DEC
ORIGINALLY DEVELOPED BY USDA-NRCS
VERMONT DEPARTMENT OF ENVIRONMENTAL CONSERVATION

ROLLED EROSION CONTROL PRODUCT (RECP) DITCH

NOTES:
REFER TO "THE VERMONT STANDARDS & SPECIFICATIONS FOR EROSION PREVENTION & SEDIMENT CONTROL -2006- " FROM THE VT AGENCY OF NATURAL RESOURCES FOR ADDITIONAL GUIDANCE.
THIS WORK SHALL BE PERFORMED IN ACCORDANCE WITH SECTION 653 AND AS SHOWN IN THE PLANS FOR TEMPORARY EROSION MATTING (PAY ITEM 653.20) OR PERMANENT EROSION MATTING (PAY ITEM 653.21).

REVISIONS	
MARCH 8, 2007	JMF
APRIL 16, 2007	WHF
JANUARY 13, 2009	WHF

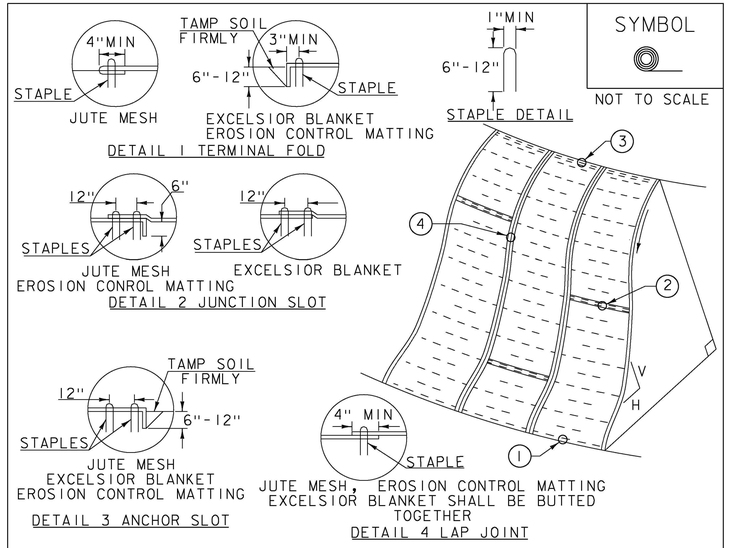

SYMBOL

NOT TO SCALE

CONSTRUCTION SPECIFICATIONS

1. APPLY TO SLOPES GREATER THAN 3H:1V OR WHERE NECESSARY TO AID IN ESTABLISHING VEGETATION.

2. APPLY FERTILIZER, LIME SEED PRIOR TO PLACING MATTING.

3. STAPLES ARE TO BE PLACED ALTERNATELY, IN COLUMNS APPROXIMATELY 2' APART AND IN ROWS APPROXIMATELY 3' APART. APPROXIMATELY 175 STAPLES ARE REQUIRED PER 4'X225' ROLL OF MATERIAL AND 125 STAPLES ARE REQUIRED PER 4'X150' ROLL OF MATERIAL.

4. DISTURBED AREAS SHALL BE SMOOTHLY GRADED. EROSION CONTROL MATERIAL SHALL BE PLACED LOOSELY OVER GROUND SURFACE. DO NOT STRETCH.

5. ALL TERMINAL ENDS AND TRANSVERSE LAPS SHALL BE STAPLED AT APPROXIMATELY 12" INTERVALS.

ADAPTED FROM DETAILS PROVIDED BY: NEW YORK STATE DEC
ORIGINALLY DEVELOPED BY USDA-NRCS
VERMONT DEPARTMENT OF ENVIRONMENTAL CONSERVATION

ROLLED EROSION CONTROL PRODUCT (RECP) SIDE SLOPE

NOTES:
REFER TO "THE VERMONT STANDARDS & SPECIFICATIONS FOR EROSION PREVENTION & SEDIMENT CONTROL -2006- " FROM THE VT AGENCY OF NATURAL RESOURCES FOR ADDITIONAL GUIDANCE.
THIS WORK SHALL BE PERFORMED IN ACCORDANCE WITH SECTION 653 AND AS SHOWN IN THE PLANS FOR TEMPORARY EROSION MATTING (PAY ITEM 653.20) OR PERMANENT EROSION MATTING (PAY ITEM 653.21).

REVISIONS	
APRIL 16, 2007	JMF
JANUARY 13, 2009	WHF

STATE OF VERMONT
HAROLD W. D'AMBRA
No. 3873
REGISTERED
PROFESSIONAL ENGINEER

AIP 3-50-0015-34

VERMONT AGENCY OF TRANSPORTATION

URS
URS CORPORATION
3 CORPORATE DRIVE, SUITE 203
CLIFTON PARK, NY 12065
(518) 688-0015

PROJECT NAME: RUTLAND SOUTHERN VERMONT REGIONAL AIRPORT
CLARENDON, VERMONT
PROJECT NUMBER: AV14-8018-300

FILE NAME: z07h124ero_det3.dgn
PROJECT LEADER: F. WALSH
DESIGNED BY: CONST. ENV. SECTION
EROSION PREVENTION & SEDIMENT CONTROL DETAILS (3)

PLOT DATE: 6/2/2013
DRAWN BY: M. WASSON
CHECKED BY:
EC-12

NTS

6/2/2013
P:\CADD\Consultants\z07h124ero_det3.dgn

PROJECT RECORD DRAWINGS

STATE OF VERMONT
AGENCY OF TRANSPORTATION

EROSION CONTROL NARRATIVE – RSA

DESCRIPTION OF PROJECT

THIS PROJECT WILL INCLUDE EXTENDING THE RUNWAY 19 SAFETY AREA (RSA) FROM 300 FEET TO 600 FEET AND WIDENING THE RSA TO A MINIMUM OF 400 FEET. THIS RSA EXTENSION WILL REQUIRE RE-LOCATING A PORTION OF EXISTING AIRPORT ROAD. THE WORK WILL BE CONSTRUCTED IN TWO PHASES:

PHASE I - AIRPORT ROAD RELOCATION: RELOCATE 780 FEET BY 28 FEET WIDE ROADWAY TO THE EAST OF THE EXISTING AIRPORT ROAD ALIGNMENT. THIS RELOCATION WILL MOVE THE INTERSECTION WITH ROUTE 103 APPROXIMATELY 800 FEET EASTERLY. THE NEW ROADWAY PROFILE WILL RISE FROM ROUTE 103 AT A GRADIENT OF 10% IN CUT FOR THE FULL LENGTH OF THE CONSTRUCTION. EXCAVATION FOR THE AIRPORT ROAD CONSTRUCTION WILL AMOUNT TO APPROXIMATELY 10,000 CUBIC YARDS AND DISTURB 1.8+/-ACRES. DRAINAGE ALONG THE NEW ROADWAY ALIGNMENT WILL BE COLLECTED AND CONVEYED VIA ROADSIDE DITCHES TO THE EXISTING ROUTE 103 ROADSIDE DITCH.

PHASE II - RUNWAY SAFETY AREA: EXTENSION OF THE RSA WILL REQUIRE THE PLACEMENT OF 200,000 CUBIC YARDS OF COMPACTED FILL MATERIAL ON THE NORTH END OF THE AIRFIELD TO A DEPTH OF 30 FEET. THIS WORK WILL DISTURB APPROXIMATELY 8.7 ACRES. RSA EMBANKMENT SIDE SLOPES WILL VARY FROM 1:3 TO 1:1.5. SLOPES GREATER THAN 1:2 WILL BE TREATED WITH RIPRAP REVETMENTS.

WASTE MATERIAL FROM THE CONSTRUCTION OF AIRPORT ROAD WILL BE USED FOR THE INITIAL RSA FILL. AN ADDITIONAL 190,000 CUBIC YARD OF FILL MATERIAL WILL BE REQUIRED FOR THE RSA CONSTRUCTION. THIS MATERIAL WILL BE HAULED IN FROM OFF SITE. SURFACE DRAINAGE FROM THE RSA WILL BE INTERCEPTED AT THE TOP OF THE EMBANKMENT ALONG THE PERIMETER OF THE RSA, COLLECTED VIA CATCH BASINS AND THEN RUN IN CULVERTS TO OUTFALL INTO DITCHES LOCATED BEYOND THE BASE OF EMBANKMENT FILL.

SITE INVENTORY AND ANALYSIS

TOPOGRAPHY, EXISTING ROADS, BUILDINGS, UTILITIES:

THE AREA OF THE PROPOSED PROJECT IMPROVEMENTS IS UNDER THE APPROACH TO RUNWAY 19. THE SITE IS OPEN FIELDS. VEGETATION IS MATURE GRASSES AND GROUND COVER EXCEPT ALONG THE EASTERLY SIDE OF EXISTING AIRPORT ROAD WHERE LOW TREES LINE THE ROADWAY, BELOW THE RUNWAY APPROACH. EXISTING TOPOGRAPHY FROM THE SOUTH TO THE NORTH FALLS FROM AN ELEVATION OF 763 FEET TO AN ELEVATION OF 700 FEET MEAN SEA LEVEL AND IS GENERALLY STEEP. THE TERMINUS OF THE EXISTING RSA IS AN EMBANKMENT AT A GRADE AT 1:2.5 (40% GRADIENT). THE BALANCE OF TERRAIN IN THE PROJECT AREA VARIES FROM 8% TO 20% SLOPES.

STATE ROUTE 103 IS LOCATED NORTH OF THE RUTLAND AIRPORT ADJACENT TO THE PROPOSED RSA EXTENSION. AIRPORT ROAD, A TOWN ROAD LOCATED OFF ROUTE 103, IS LOCATED WITHIN THE PROJECT AREA AND WILL REQUIRE RELOCATION TO THE EAST.

THERE ARE NO BUILDINGS WITHIN THE PROJECT AREA. THERE ARE TWO RUNWAY 19 APPROACH LIGHT TOWERS LOCATED WITHIN THE RSA EXTENSION FILL AREA THAT WILL HAVE TO BE REMOVED DURING THE CONSTRUCTION. THESE APPROACH LIGHTING TOWERS WILL BE RESET UPON PROJECT COMPLETION.

UTILITIES INCLUDE OVERHEAD PRIMARY ELECTRIC AND TELEPHONE LINES LOCATED ALONG EXISTING AIRPORT ROAD AND UNDERGROUND AIRPORT ELECTRIC SERVICE FOR THE RUNWAY APPROACH LIGHTS. THESE UTILITIES ARE TO BE RELOCATED PRIOR TO RECEIVING NOTICE TO PROCEED.

SITE DRAINAGE CHARACTERISTICS:

THE EXISTING TERRAIN WITHIN THE PROJECT LIMITS FALLS SOUTH TO NORTH SUCH THAT DRAINAGE IS INTERCEPTED IN ROADSIDE DITCHES ALONG THE SOUTH SIDE OF STATE ROUTE 103, THEN CONVEYED TO THE NORTH SIDE OF ROUTE 103 VIA CROSS CULVERTS. STORM WATER RUNOFF WITHIN THE PROJECT AREA IS GENERALLY OVER LAND EXCEPT FOR ON THE EXISTING RSA WHERE RUNOFF IS INTERCEPTED BY DROP INLETS AND PIPED TO THE BASE OF THE EXISTING RSA EMBANKMENT WHERE IT IS THEN DISCHARGED TO RUN OVER LAND. AIRPORT ROAD DRAINAGE WITHIN THE PROJECT AREA IS LIMITED TO A SINGLE CROSS CULVERT.

WATERWAYS, BODIES OR WATER:

THERE ARE A TOTAL OF 18 DISTINCT WETLANDS LOCATED ON AIRPORT PROPERTY. THE PROJECT AREA FOR THE RELOCATED AIRPORT ROAD WILL NOT IMPACT ANY JURISDICTIONAL WETLANDS OR WETLAND BUFFER AREAS.

THE PROPOSED RUNWAY SAFETY AREA EXTENSION WILL IMPACT APPROXIMATELY 3600 SQUARE FEET OF WETLANDS. THIS WETLAND (DESIGNATED AS WETLAND "L") IS LOCATED TO THE WEST OF THE RSA. WETLAND P IS LOCATED MORE THAN 200 FEET EAST OF THE PROPOSED AIRPORT ROAD. THIS WETLAND BORDERS AN INTERMITTENT STREAM LOCATED ANOTHER 100+/- FEET TO THE EAST. USGS QUAD MAPPING (RUTLAND) SHOWS AN UNNAMED TRIBUTARY TO OTTER CREEK, AT ITS NEAREST LOCATION SOME 600 FEET NORTHEAST OF THE PROPOSED RELOCATED AIRPORT ROAD INTERSECTION WITH ROUTE 103. OTTER CREEK IS LOCATED APPROXIMATELY 6,000 FEET WEST OF THE PROJECT.



VEGETATION:

THE AIRFIELD CONSISTS OF OPEN MEADOW GRASSLANDS THAT ARE MOWED ANNUALLY. EXISTING AIRPORT ROAD TO BE REMOVED HAS A HEDGE ROW ON EITHER SIDE OF THE ROAD. THIS HEDGE ROW WILL BE REMOVED DURING CONSTRUCTION OF THE RUNWAY SAFETY AREA.

SOILS:

SOIL TYPES IN THE PROPOSED CONSTRUCTION AREA ARE SHOWN ON SHEET EC-3.

SENSITIVE RESOURCE AREAS:

THERE ARE NO RARE, THREATENED, OR ENDANGERED SPECIES LOCATED WITHIN THE PROPOSED RSA EXTENSION IMPROVEMENTS AREA. SURROUNDING AREA MEADOWS HAVE BEEN DESIGNATED AS HABITAT FOR GRASSLAND BIRDS. THERE IS A MEMORANDUM OF UNDERSTANDING BETWEEN THE VT AGENCY OF NATURAL RESOURCES (VANR) AND THE VT AGENCY OF TRANSPORTATION (VTRANS) THAT THE AIRPORT DELAY GRASS MOWING AND CONSTRUCTION DURING THE NESTING SEASON FOR GRASSLAND BIRDS. AS A MITIGATION MEASURE VTRANS WILL MOW THE PROPOSED SITE FOR CONSTRUCTION OF THE RSA AND ROADWAY RE-LOCATION BEGINNING IN MAY TO DISCOURAGE THESE GRASS LAND BIRDS FROM NESTING IN THE PROJECT AREA. GRASS IN MOWED AREAS IS TO BE MAINTAINED AT LESS THAN 4" IN HEIGHT.

THERE ARE NO FLOODPLAINS, HISTORIC, ARCHITECTURAL, CULTURAL, AND ARCHAEOLOGICAL RESOURCES WITHIN THE PROPOSED PROJECT AREA.

TEMPORARY EROSION PREVENTION & SEDIMENT CONTROL

" PROJECT DEMARCATION FENCING " WILL BE PLACED TO DELINEATE THE LIMITS THE CONTRACTOR CAN ACCESS WITH CONSTRUCTION EQUIPMENT. THIS MEASURE LIMITS THE AREA THAT CAN BE EXPOSED TO EROSION.

SEEDING, MULCHING AND BIODEGRADABLE EROSION CONTROL MATTING, OR EQUIVALENT PRODUCTS, WILL BE UTILIZED ON ALL SLOPES STEEPER THAT 1:3 THAT ARE NOT LINED WITH STONE REVETMENT. THE SLOPES FROM THE RSA SHALL BE STABILIZED WITHIN 48 HOURS OF REACHING FINAL/FINISH GRADE OR DURING INTERMITTENT PHASES OF CONSTRUCTION ACTIVITY.

ANY SLOPES OR OPEN AREAS TO BE EXPOSED FOR SEVERAL DAYS PRIOR TO FINAL GRADING SHALL BE MULCHED. THE FORECAST OF RAINFALL EVENTS SHALL ALSO TRIGGER PROTECTION OF EXPOSED AREAS OR SLOPES.

TEMPORARY MEASURES TO CONTROL SEDIMENT TRANSPORT INCLUDE:

CONSTRUCTION OF A TEMPORARY SEDIMENTATION BASIN ALONG WITH PERIMETER DIVERSION BERMS AND/OR DIVERSION SWALES DIRECTING CONSTRUCTION RUNOFF TO THIS BASIN AS SHOWN ON THE PLANS. INSTALLATION OF PERIMETER AND INTERIM SILT FENCES AS THE WORK IS PHASED, AS SHOWN OR CALLED FOR ON PLANS OR OTHERWISE APPROVED BY THE ENGINEER. EACH LINE OF SILT FENCE WILL BE PLACED WITH THE ENDS TURNED SLIGHTLY UPHILL TO CREATE A PONDING CONDITION SHOULD WATER TRY TO RUN AROUND THE FENCING. THE MAXIMUM SLOPE LENGTH BETWEEN SEPARATE RUNS OF SILT FENCE SHALL NOT EXCEED 100 FEET.

A STABILIZED CONSTRUCTION ENTRANCE AS CALLED FOR ON THE PLANS. MODIFICATION AND/OR RELOCATION OF THE STABILIZED CONSTRUCTION ENTRANCE(S) ARE SUBJECT TO PRIOR APPROVAL BY THE ENGINEER.

PERMANENT EROSION CONTROL MEASURES

PERMANENT EROSION CONTROL MEASURES TO BE UTILIZED INCLUDE:

PERMANENT EROSION CONTROL MEASURES WILL INCLUDE GRASS OR OTHER SUITABLE GROUND COVER. AT LOCATIONS WHERE EMBANKMENT GRADING EXCEEDS 1 (VERTICAL) ON 2 (HORIZONTAL) STONE REVETMENT / LINING SHALL BE PLACED. AS THE WORK PROCEEDS ALL DISTURBED AREAS SHALL BE SEEDED AND MULCHED PROMPTLY UPON ACHIEVING FINAL GRADES USING AN APPROVED SEEDING FORMULA FOR RURAL AREAS.

GENERAL EROSION & SEDIMENT CONTROL GUIDELINES

THE EROSION CONTROL PLANS ARE MEANT AS A GUIDELINE FOR PREVENTING EROSION AND CONTROLLING SEDIMENT TRANSPORT. THE WORK OUTLINED IN THIS NARRATIVE CONSISTS OF APPLYING MEASURES THROUGHOUT THE LIFE OF THE PROJECT TO CONTROL EROSION AND MINIMIZE THE SEDIMENTATION OF RECEIVING WATERS. THE MEASURES INCLUDE STABILIZATION AND STRUCTURAL PRACTICES, STORM WATER CONTROLS, AND OTHER POLLUTION PREVENTION CONTROLS.

COORDINATE THE INSTALLATION, USE, AND REMOVAL OF EROSION AND SEDIMENT CONTROL MEASURES WITH CONSTRUCTION ACTIVITIES TO ENSURE ECONOMICAL, EFFECTIVE AND CONTINUOUS EROSION, AND SEDIMENT CONTROL. EMPLOY TEMPORARY STABILIZATION PRACTICES IN INCREMENTAL STAGES AS CONSTRUCTION PROCEEDS. THE CONTRACTOR WILL USE ADDITIONAL EROSION CONTROL MEASURES WHEN NECESSARY THE SEQUENCE OF CONSTRUCTION OR WHEN DIRECTED BY THE ENGINEER. REFER TO SECTION 105.23 OF THE VERMONT AOT STANDARD SPECIFICATIONS FOR CONSTRUCTION, LATEST EDITION.

INSTALL ALL EROSION AND SEDIMENT CONTROL MEASURES AS SHOWN OR CALLED FOR ON THE EROSION CONTROL PLAN OR AS DIRECTED BY THE ENGINEER. DO NOT MODIFY THE TYPE, SIZE OR LOCATION OF ANY CONTROL DEVICE OR PRACTICE WITHOUT PRIOR APPROVAL FROM THE ENGINEER. ALL CHANGES SHALL BE NOTED ON THE PLANS, IN THE WEEKLY INSPECTION REPORT, AND REPORTED TO THE APPROPRIATE AUTHORITY IN A TIMELY MANNER. INSPECT ALL CONTROL MEASURES WEEKLY AND AFTER EACH RAINFALL EVENT. MAKE REPORTS AS NECESSARY OR AS DIRECTED BY THE ENGINEER.

PREVENTING INITIAL SOIL EROSION IS MUCH MORE EFFECTIVE THAT TREATING ERODED SEDIMENT. THEREFORE, STABILIZE ALL DISTURBED AREAS PROMPTLY AFTER CONSTRUCTION ACTIVITY HAS TEMPORARILY OR PERMANENTLY CEASED. TEMPORARY VEGETATION SHALL BE ESTABLISHED IF THE AREA IS TO BE WITHOUT CONSTRUCTION ACTIVITY FOR A PERIOD OF 14 DAYS OR MORE. ALL PERIMETER CONTROL MEASURES SHALL BE INSTALLED FOLLOWING CLEARING, BUT PRIOR TO START OF ANY GRUBBING OR GRADING ACTIVITY. INSTALL ALL OTHER TEMPORARY CONTROLS IN INCREMENTAL STAGES AS CONSTRUCTION PROCEEDS.
MAINTAINING VEGETATED BUFFERS ALONG STREAM BANKS, WETLANDS AND OTHER SENSITIVE AREAS IS A CRUCIAL EROSION AND SEDIMENTATION CONTROL MEASURE THAT SHOULD BE ESTABLISHED WHENEVER POSSIBLE.

CONTROL ONLY THE SEDIMENT-LADEN RUNOFF GENERATED BY THE PROJECT SITE. INTERCEPT, COLLECT AND CONVEY CLEAN OFFSITE RUNOFF AROUND OR THROUGH THE PROJECT SITE USING DIVERSION BERMS, DIVERSION CHANNELS, CULVERTS AND/OR TEMPORARY PIPING.

DO NOT ALLOW CONSTRUCTION EQUIPMENT TO OPERATE ON THE DOWN SIDE OF PERIMETER CONTROL MEASURES.

FINAL CONDITIONS SITE PLAN

SEE DRAWINGS 14 OF 36 FOR FINAL CONSTRUCTION CONDITIONS. ALL SILT FENCE AND TEMPORARY EROSION CONTROL MEASURES ARE TO BE REMOVED PRIOR TO ACCEPTANCE OF THE PROJECT.

DROP INLET AND CULVERT CROSSING AIRPORT ROAD AT STATION 8+55 ARE UTILIZED FOR TEMPORARY EROSION CONTROL MEASURES DURING CONSTRUCTION TO DIVERT UNTREATED RUNOFF FROM PORTIONS OF PROPOSED RSA GRADING TO SEDIMENTATION BASIN EAST. ONCE CONSTRUCTION IS COMPLETED, SEDIMENTATION BASIN EAST WILL BE RESTORED TO PRE-CONSTRUCTION GRADE AND THE SECTION OF DRAINAGE IS TO BE REMOVED OR ABONDONED.

THE MANHOLE AND PIPE CROSSING AIRPORT ROAD AT STATION 8+80 IS UTILIZED TO DIVERT STORMWATER FROM ROUTE 103 ROADSIDE DITCH TO THE 72" CULVERT AT STATION 226+60 (ROUTE 103). THIS SECTION OF DRAINAGE IS A PERMANENT FEATURE THAT WILL SUPPLEMENT THE 24" CULVERT CROSSING ROUTE 103 AT STATION 232+50 TO PREVENT OVERTOPPING AIRPORT ROAD / ROUTE 103 INTERSECTION FOR STORMS UP TO A 25 YEAR STORM EVENT. DURING RESTORATION OF SEDIMENTATION BASIN E A 30" CPEP STORM PIPE TO BE ADDED TO CONNECT THE PERMANENT DRAINAGE CROSSING AIRPORT ROAD TO THE OUTLET PIPE FROM THE SEDIMENTATION BASIN.

AIP 3-50-0015-34

VERMONT AGENCY OF TRANSPORTATION

URS
URS CORPORATION
3 CORPORATE DRIVE, SUITE 203
CLIFTON PARK, NY 12065
(518) 688-0015

PROJECT NAME: RUTLAND SOUTHERN VERMONT REGIONAL AIRPORT
CLARENDON, VERMONT
PROJECT NUMBER: AV14-8018-300

FILE NAME: z07h124ero_rsanarr.dgn
PROJECT LEADER: F. WALSH
DESIGNED BY: G. D'AMICO
EROSION CONTROL NARRATIVE-RSA
PLOT DATE: 6/2/2013
DRAWN BY: A. ZAWILINSKI
CHECKED BY:
EC-13

6/2/2013
P:\CADD\Consultants\z07h124ero_rsanarr.dgn

PROJECT RECORD DRAWINGS

N

VT STATE PLANE GRID

WETLAND O
WETLAND I
WETLAND G
WETLAND H
WETLAND J
WETLAND K2
WETLAND D
WETLAND C
WETLAND B
WETLAND A
ROUTE 7B
WETLAND M
WETLAND L
WETLAND R
WETLAND P2
AIRPORT ROAD
MILL RIVER ROAD
VT ROUTE 103

STATE OF VERMONT
GERALD M. D'AMICO
No. 3873
REGISTERED
PROFESSIONAL ENGINEER

LEGEND

WETLAND

RUNWAY SAFETY AREA LIMITS —— RSA ——

0 300 600

SCALE IN FEET

AIP 3-50-0015-34

VERMONT AGENCY OF TRANSPORTATION

URS
URS CORPORATION
3 CORPORATE DRIVE, SUITE 203
CLIFTON PARK, NY 12065
(518) 688-0015

PROJECT NAME: RUTLAND SOUTHERN VERMONT REGIONAL AIRPORT
CLARENDON, VERMONT

PROJECT NUMBER: AV14-8018-300

FILE NAME: z07hl24wet_map.dgn
PLOT DATE: 6/2/2013
PROJECT LEADER: F. WALSH
DRAWN BY: M. WASSON
DESIGNED BY: G. D'AMICO
CHECKED BY:
AIRPORT WETLAND MAP
WM-1

PROJECT RECORD DRAWINGS

6/2/2013
P:\CADD\Consultants\z07hl24wet_map.dgn

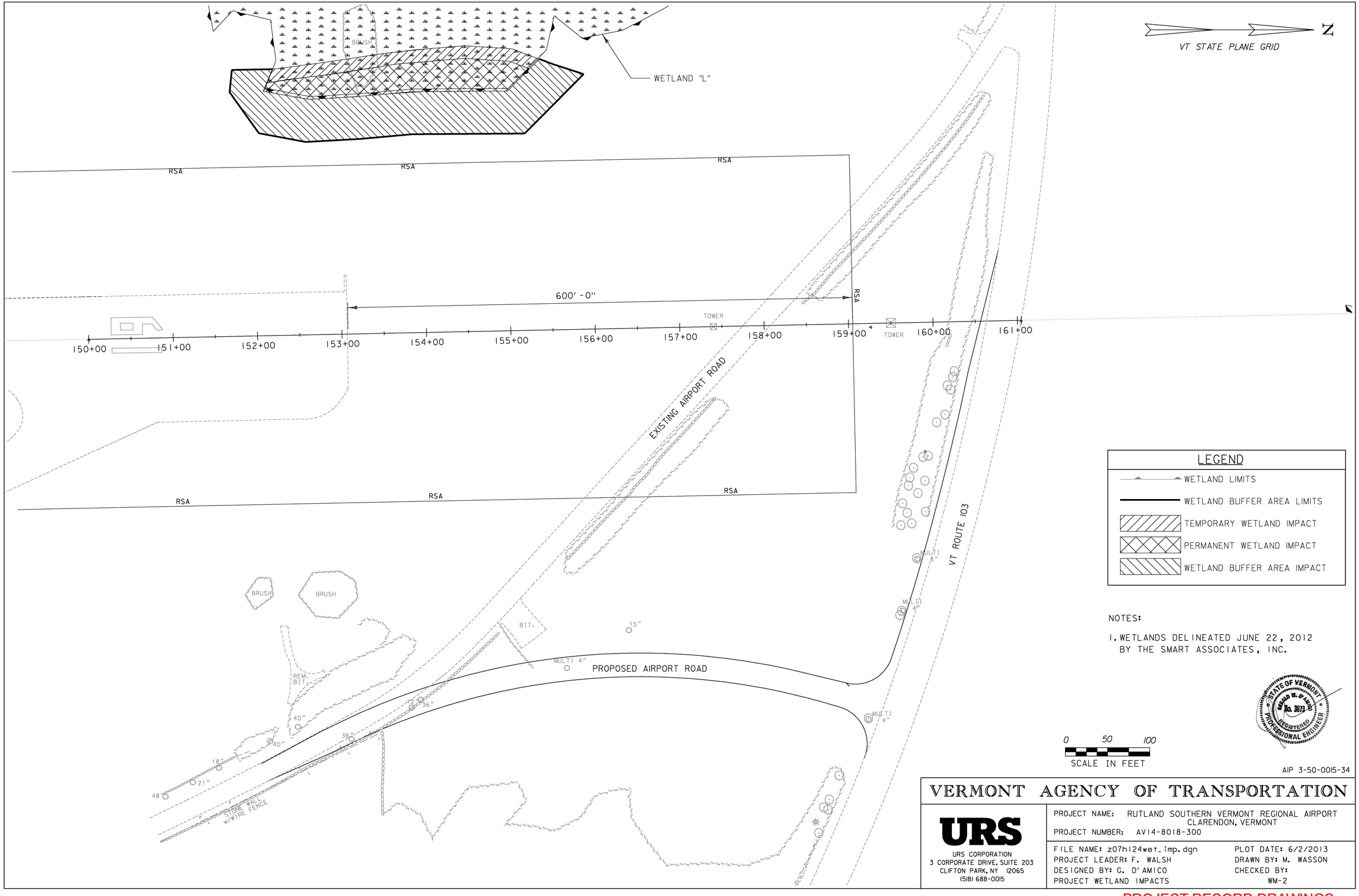

VERMONT AGENCY OF TRANSPORTATION

URS
URS CORPORATION
3 CORPORATE DRIVE, SUITE 203
CLIFTON PARK, NY 12065
(518) 688-0015

PROJECT NAME: RUTLAND SOUTHERN VERMONT REGIONAL AIRPORT
CLARENDON, VERMONT
PROJECT NUMBER: AV14-8018-300

FILE NAME: z07h124wet_imp.dgn
PROJECT LEADER: F. WALSH
DESIGNED BY: G. D'AMICO
PROJECT WETLAND IMPACTS

PLOT DATE: 6/2/2013
DRAWN BY: M. WASSON
CHECKED BY:
WM-2

6/2/2013
P:\CADD\Consultants\z07h124wet_imp.dgn

PROJECT RECORD DRAWINGS

MODIFICATIONS TO A FA-11500 MEDIUM INTENSITY APPROACH LIGHT SYSTEM (MALS) WITH RUNWAY ALIGNMENT INDICATOR LIGHTS (RAIL) AND NEW SERVICE ENTRANCE FOR A VISUAL APPROACH SLOPE INDICATOR (VASI)

RUTLAND-SOUTHERN VERMONT REGIONAL AIRPORT
RUTLAND, VERMONT

REV	APPROVED DATE	DESCRIPTION	JCN	REDLINE DATE	APVD
	05/20/2013	CONSTRUCTION, WR #12507 (DG)	992395	10/02/2012	

DEPARTMENT OF TRANSPORTATION
FEDERAL AVIATION ADMINISTRATION
ATO - TECHNICAL OPERATIONS — EASTERN SERVICE AREA

MALSR
RUNWAY 19
COVER SHEET

RUTLAND — RUTLAND - SOUTHERN VERMONT REGIONAL AIRPORT — VT

REVIEWED BY	SUBMITTED BY	APPROVED BY
	D.L. WEEKS	P. KIRBY
	PROJECT ENGINEER	MGR: CONSTRUCTION - CENTER C

DESIGNED DLW
DRAWN DG
CHECKED DLW
ISSUED BY: ENGINEERING SERVICES NAVAIDS
DATE 05/20/2013 JCN 992395
DRAWING NO RUT-NEZ120015-G001 REV

DO NOT SIGN

PROJECT RECORD DRAWINGS

THIS DRAWING PRODUCED ON NEW ENGLAND REGION MICROSTATION SYSTEM

ISSUED FOR: CONSTRUCTION

11/14/2013 10:09:56 AM Plotted by: Linda CTR Lojko

EDM: rut-nez120015-g001.dgn

DRAWING LIST

DRAWING NUMBER	DRAWING TITLE
GENERAL DRAWINGS	
RUT-NEZ120015-G001	COVER SHEET
RUT-NEZ120015-G002	INDEX SHEET
RUT-NEZ120015-G003	GENERAL NOTES
RUNWAY 19 MALSR	
RUT-NEZ120015-C001	FACILITY SITE PLAN
RUT-NEZ120015-C002	MISCELLANEOUS DETAILS
RUT-NEZ120015-C003	GRAVEL ACCESS ROAD
RUT-NEZ120015-S001	FOUNDATION DESIGN - MG-20 LIR STRUCTURE STATION 2+00 AND 3+80
RUT-NEZ120015-S002	FOUNDATION DESIGN - MG-30 LIR STRUCTURE STATION 5+70
RUT-NEZ120015-Q001	EQUIPMENT INSTALLATION - STATION 2+00 AND 3+80
RUT-NEZ120015-Q002	EQUIPMENT INSTALLATION - STATION 5+70
RUT-NEZ120015-Q003	LOW IMPACT RESISTANT (LIR) STRUCTURES ASSEMBLY AND MOUNTING DETAILS
RUT-NEZ120015-E001	ELECTRICAL DETAILS
RUNWAY 19 VASI	
RUT-NEZ120016-C001	FACILITY SITE PLAN
RUT-NEZ120016-C002	MISCELLANEOUS DETAILS - SHEET 1 OF 2
RUT-NEZ120016-C003	MISCELLANEOUS DETAILS - SHEET 2 OF 2

ABBREVIATIONS

A - AMP
A-G - AIR TO GROUND
AGL - ABOVE GROUND/GRADE LEVEL
ALS - APPROACH LIGHT SYSTEM
ANI - NAS IMPLEMENTATION (FAA)
AOA - AIR OPERATIONS AREA
ARP - AIRPORT REFERENCE POINT
ASOS - AUTOMATED SURFACE OBSERVATION SYSTEM (NWS)
AT - AIR TRAFFIC
AWG - AMERICAN WIRE GAUGE
BCPS - BATTERY CHARGING POWER SUPPLY (ILS/LCU)
BGL - BELOW GROUND/GRADE LEVEL
BLD - BUILDING
BSCU - BARE SOLID COPPER
BTV - BURLINGTON (VERMONT)
C - CONTROL
CFW - CENTERFIELD WIND
CKT - CIRCUIT
CND - CONDUIT (DUCT)
CO - CONTRACTING OFFICER (FAA)
COTR - CONTRACTING OFFICER'S TECHNICAL REPRESENTATIVE (FAA)
CW - COURSE WIDTH (LOCALIZER)
DEB - DIRECT EARTH BURIAL
DIA - DIAMETER
DISC - DISCONNECT
DME - DISTANCE MEASURING EQUIPMENT
DME CO - DME CORPORATION
DPU - DATA PROCESSING UNIT
DU - DISTRIBUTION UNIT
DWG - DRAWING
EL - ELEVATION
EMT - ELECTRIC METALLIC TUBING
EOR - END OF RUNWAY
FAA - FEDERAL AVIATION ADMINISTRATION
FBO - FIXED BASE OPERATOR
FDN - FOUNDATION
FOD - FOREIGN OBJECT DEBRIS
FT - FEET
GA - GENERAL AVIATION
GALV - GALVANIZED
GFCI - GROUND FAULT CIRCUIT INTERRUPTER
G-G - GROUND TO GROUND
GFM - GOVERNMENT FURNISHED MATERIAL
GND - GROUND
GRSC - GALVANIZED RIGID STEEL CONDUIT
GS - GLIDE SLOPE (ILS)
HZ - HERTZ
ICC - INDIVIDUAL CONTROL CABINET
ILS - INSTRUMENT LANDING SYSTEM
IN - INCH
INSUL - INSULATED
KHZ - KILOHERTZ
KV - KILOVOLT
KVA - KILOVOLT AMPERE
LCU - LINK CONTROL UNIT (RMMS/RMS)
LHA - LAMP HOUSING ASSEMBLY (PAPI)
LIR - LOW IMPACT RESISTANCE
LOC - LOCALIZER (ILS)
LOM - LOCATOR OUTER MARKER (NDB & OM)
MALS - MEDIUM INTENSITY APPROACH LIGHTING SYSTEM
MALSF - MALS WITH SEQUENCED FLASHERS
MALSR - MALS WITH RUNWAY ALIGNMENT INDICATOR LIGHTS (MALS-RAIL)
MAX - MAXIMUM
MG - MAST-ON-GROUND (LIR)
MHZ - MEGAHERTZ
MIN - MINIMUM
MP - MULTI-POINT (GROUND)
MS - MAST-ON-STAND (LIR)
MSL - MEAN SEA LEVEL
N - NEUTRAL
N/A - NOT APPLICABLE
NAS - NATIONAL AIRSPACE SYSTEM
NDB - NON-DIRECTIONAL BEACON
NEC - NATIONAL ELECTRIC CODE
NOTAM - NOTICE TO AIRMEN
NWS - NATIONAL WEATHER SERVICE
OB - OBSTRUCTION
OFA - OBJECT FREE AREA
OM - OUTER MARKER (ILS)
P - POWER
PARSONS - PARSONS CORPORATION (TSSC)
PAPI - PRECISION APPROACH PATH INDICATOR
PCA - POWER AND CONTROL ASSEMBLY
PCU - POWER AND CONTROL UNIT
PNL - PANEL
PR - PAIR
PRIM - PRIMARY
R/W - RUNWAY
RAIL - RUNWAY ALIGNMENT INDICATOR LIGHTS
RE - RESIDENT ENGINEER (FAA/TSSC)
REIL - RUNWAY END IDENTIFIER LIGHTS
REL - RUNWAY EDGE LIGHTS
REQ - REQUIRED
RF - RADIO FREQUENCY
RMM - REMOTE MAINTENANCE MONITORING
RMMS - REMOTE MAINTENANCE MONITORING SYSTEM
RMS - REMOTE MONITORING SUBSYSTEM
RRCS - REMOTE RADIO CONTROL SYSTEM
RSA - RUNWAY SAFETY AREA
RT - REMOTE TRANSMITTER
RUT - RUTLAND - SOUTHERN VERMONT REGIONAL AIRPORT
SCH - SCHEDULE
SEC - SECONDARY
SMO - SYSTEM MANAGEMENT OFFICE (FAA)
SP - SINGLE-POINT (GROUND)
SPD - SURGE PROTECTIVE DEVICE
SS - STAINLESS STEEL
SSC - SYSTEM SUPPORT CENTER (FAA)
STA - STATION
T - TELEPHONE
T/W - TAXIWAY
TEL - TAXIWAY EDGE LIGHTS
TELCO - TELEPHONE COMPANY
TH - THRESHOLD
TSA - TAXIWAY SAFETY AREA
TSSC - FAA TECHNICAL SUPPORT SERVICE CONTACT (PARSONS)
TYP - TYPICAL
UPS - UNINTERRUPTABLE POWER SOURCE/SUPPLY
V - VOLT
VASI - VISUAL APPROACH SLOPE INDICATOR
VHF - VERY HIGH FREQUENCY
W/ - WITH
WS - WIND SOCK
XFMR - TRANSFORMER
XMTR - TRANSMITTER

SYMBOLS LEGEND

SUBTITLE REFERENCE

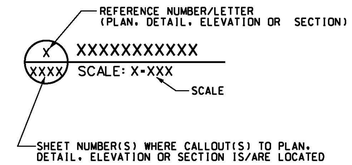

ELEVATION CALLOUT REFERENCE

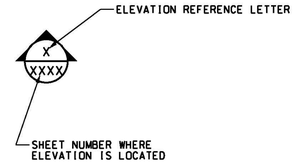

SECTION CALLOUT REFERENCE

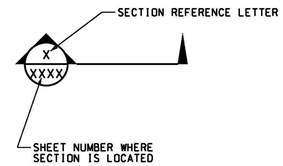

DETAIL CALLOUT REFERENCE

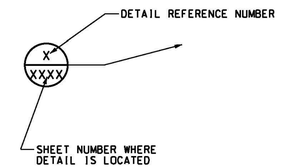

DRAWING PREFIXES

CXXX - CIVIL
EXXX - ELECTRICAL/ELECTRONIC
GXXX - GENERAL
OXXX - EQUIPMENT
SXXX - STRUCTURAL

REV	APPROVED DATE	DESCRIPTION	JCN	REDLINE DATE	APVD
	05/20/2013	CONSTRUCTION, WR #12507 (DG)	992395	10/02/2012	

DEPARTMENT OF TRANSPORTATION
FEDERAL AVIATION ADMINISTRATION
ATO - TECHNICAL OPERATIONS — EASTERN SERVICE AREA

MALSR
RUNWAY 19
INDEX SHEET

RUTLAND — RUTLAND - SOUTHERN VERMONT REGIONAL AIRPORT — VT

REVIEWED BY	SUBMITTED BY	APPROVED BY
	D.L. WICK (DO NOT SIGN)	P.KIRBY (DO NOT SIGN)
	PROJECT ENGINEER	MGR: CONSTRUCTION - CENTER C

DESIGNED DLW | DRAWN DG | CHECKED DLW
ISSUED BY: ENGINEERING SERVICES NAVAIDS
DATE 05/20/2013 | JCN 992395
DRAWING NO RUT-NEZ120015-G002 | REV

ISSUED FOR: CONSTRUCTION

11/14/2013 10:09:59 AM Plotted by:Linda CTR Lajko

EDM: rut-nez120015-g002.dgn

PROJECT RECORD DRAWINGS
THIS DRAWING PRODUCED ON NEW ENGLAND REGION MICROSTATION SYSTEM

GENERAL NOTES:

1. THIS DRAWING PACKAGE INDICATES WORK REQUIRED FOR THE MODIFICATION TO THE RUNWAY 19 MALSR AND NEW SERVICE ENTRANCE FOR THE RUNWAY 19 VASI AT RUTLAND - SOUTHERN VERMONT REGIONAL AIRPORT, RUTLAND, VT. THIS DRAWING PACKAGE ALSO INDICATES REQUIRED POWER SUPPLY AND CONTROL PROVISIONS ASSOCIATED WITH THE MODIFICATION TO THESE FACILITIES.

2. WORK ASSOCIATED WITH THIS FACILITY IS LOCATED AT RUTLAND - SOUTHERN VERMONT REGIONAL AIRPORT. NO MOVEMENT BY CONTRACTOR, SUBCONTRACTORS, OR DELIVERY VEHICLES SHALL BE MADE ON THE ACTIVE AIR OPERATIONS AREA (AOA) OR AIRCRAFT MOVEMENT AREA WITHOUT ESCORT BY THE FAA CONTRACTING OFFICERS TECHNICAL REPRESENTATIVE (COTR), THE RESIDENT ENGINEER (RE), OR DESIGNATED CONTRACTOR ESCORT VEHICLE. THE CONTRACTOR SHALL CERTIFY IN WRITING THAT ALL DRIVING EMPLOYEES, SUBCONTRACTOR EMPLOYEES, AND DELIVERY EMPLOYEES HAVE READ AND UNDERSTAND THE FAA AIRPORT GROUND VEHICLE OPERATIONS GUIDE (DOT/FAA/ASY-300 98/001) PER FAA ORDER 5200.7A.

3. THE CONTRACTOR SHALL ARRANGE FOR AND ABIDE BY ALL SECURITY BADGING AND ACCESS REQUIREMENTS AT RUTLAND - SOUTHERN VERMONT REGIONAL AIRPORT TO WORK ON THE AIRFIELD. SECURITY BADGING MAY BE REQUIRED, AND SHALL BE ON DISPLAY AT ALL TIMES WHILE ON THE AIRFIELD.

4. CONTRACTOR ACCESS ROUTES, STAGING AREAS, AND EMPLOYEE PARKING AREAS SHALL BE APPROVED IN ADVANCE BY RUTLAND - SOUTHERN VERMONT REGIONAL AIRPORT.

5. CONTRACTOR'S VEHICLES SHALL BE EQUIPPED WITH A YELLOW ROTATING BEACON AND/OR AN APPROVED ORANGE AND WHITE FLAG.

6. CONTRACTOR'S CREW SHALL BE EQUIPPED WITH A RADIO AND SHALL MONITOR UNICOM AT 122.800.

7. WORK ON THE AOA AND WITHIN 200 FEET OF THE RUNWAY 1-19 CENTERLINE AND 300 FEET FROM THE RUNWAY THRESHOLD (DEFINED AS THE RUNWAY SAFETY AREA) WILL REQUIRE A RUNWAY SHUTDOWN OR OTHER PROVISIONS. ANY ACTIVITIES INVOLVING CRANES OR OTHER EQUIPMENT EXCEEDING 14 FEET IN HEIGHT MAY ALSO REQUIRE A RUNWAY SHUTDOWN OR OTHER PROVISIONS. COORDINATE ALL SUCH ACTIVITIES AND REQUIRED SHUTDOWNS WITH THE COTR/RE AND AIRPORT MANAGEMENT AT LEAST 48 HOURS IN ADVANCE.

8. WORK ASSOCIATED WITH ANY FAA FACILITY MAY REQUIRE A SHUTDOWN. COORDINATE ALL RELATED ACTIVITIES AND REQUIRED SHUTDOWNS WITH THE COTR, RE, AND BTV SSC AT LEAST 48 HOURS IN ADVANCE.

9. THE CONTRACTOR SHALL MAINTAIN A CLEAN WORK SITE. EQUIPMENT AND MATERIAL SHALL BE REMOVED FROM THE WORK SITE AT THE END OF EACH WORK SHIFT. THE CONTRACTOR SHALL KEEP THE WORK SITE FREE OF CONSTRUCTION DEBRIS AND OTHER FOREIGN OBJECT DEBRIS (FOD) AT ALL TIMES. THE CONTRACTOR SHALL CONDUCT FOD INSPECTIONS OF ALL VEHICLES PRIOR TO DRIVING ON THE AOA. THE CONTRACTOR SHALL BE PREPARED TO REMOVE ANY DUST, DIRT, MUD, OR OTHER FOD TRACKED OR OTHERWISE LEFT ON THE AOA AT ALL TIMES.

10. THE CONTRACTOR SHALL STRICTLY COMPLY WITH ALL OSHA REGULATIONS AT ALL TIMES. THE COTR AND/OR RE RESERVES THE RIGHT TO SUSPEND THE PROJECT SHOULD HE OR SHE DETERMINE THAT AN UNSAFE CONDITION EXISTS.

11. THE CONTRACTOR SHALL PROVIDE AND INSTALL ALL MATERIAL UNLESS OTHERWISE INDICATED. THE CONTRACTOR SHALL PROVIDE ALL LABOR, EQUIPMENT, AND REQUIRED TEMPORARY POWER UNLESS OTHERWISE INDICATED.

12. ALL MATERIAL FURNISHED FOR THIS PROJECT IS INDICATED AS "GOVERNMENT FURNISHED MATERIAL (GFM)". THE GFM LIST INCLUDES SPARES FOR SOME ITEMS. ALL SPARES SHALL BE RETURNED TO THE FAA, IN WORKING ORDER, AT THE CONCLUSION OF THE CONSTRUCTION. GFM WILL BE DELIVERED TO THE AIRPORT BY THE GOVERNMENT.

13. THE CONTRACTOR SHALL LEGALLY DISPOSE OF ALL MATERIAL AND EQUIPMENT NOT RETURNED TO OR RETAINED BY THE FAA.

14. IF CONDITIONS ARE DIFFERENT THAN THOSE INDICATED IN THE DRAWINGS OR SPECIFICATIONS, THE CONTRACTOR SHALL CONTACT THE COTR/RE PRIOR TO PROCEEDING WITH CONSTRUCTION.

15. THE CONTRACTOR SHALL PROVIDE AND MAINTAIN A PORTABLE TOILET FACILITY AT THE WORKSITE.

SITE WORK:

1. ALL DIMENSIONS, ELEVATIONS, CONTOURS, AND HEIGHTS INDICATED ARE APPROXIMATE AND SHALL BE VERIFIED IN THE FIELD BY THE CONTRACTOR.

2. ALL TRENCHES AND EXCAVATIONS SHALL BE BACKFILLED AND COMPACTED TO MATCH THE EXISTING GRADE BEFORE LEAVING THE SITE EVERYDAY. STEEL PLATES MAY BE USED AS AN ALTERNATIVE WITH WRITTEN PERMISSION FROM THE COTR AND AIRPORT MANAGEMENT.

3. EXISTING UTILITY LOCATIONS SHOWN ARE APPROXIMATE. OTHER UTILITIES MAY NOT BE SHOWN. THE CONTRACTOR SHALL FIELD LOCATE ALL SUBSURFACE UTILITIES PRIOR TO ANY EXCAVATION OR DIRECTIONAL BORING OPERATIONS. DIRECT EARTH BURIED (DEB) RUNWAY AND TAXIWAY LIGHTING POWER CABLES AND OTHER FAA FACILITY POWER CABLES ARE HIGH VOLTAGE. FORTY-EIGHT (48) HOUR (MINIMUM) NOTICE BY THE CONTRACTOR TO THE COTR, THE AIRPORT, AND THE BTV SSC IS REQUIRED FOR ALL UTILITY MARKING AND/OR FACILITY SHUTDOWNS.

4. THE CONTRACTOR SHALL BE PREPARED TO IMMEDIATELY REPAIR ANY UTILITIES DAMAGED DURING EXCAVATION OPERATIONS AND SHALL PERFORM ALL SUCH REPAIRS AT CONTRACTOR EXPENSE.

5. ALL UNDERGROUND CABLE SHALL BE IN CONDUIT EXCEPT FOR BARE COPPER GROUND WIRE, GUARD WIRE, COUNTERPOISE, AND WHERE OTHERWISE INDICATED. UNDERGROUND CONDUIT SHALL BE 30 INCHES (MINIMUM) BELOW GRADE EXCEPT WHEN INTERFACING HANDHOLE ENTRANCES OR EXISTING CONDUIT AT OTHER DEPTHS OR WHERE OTHERWISE INDICATED. UNDERGROUND CONDUIT SHALL BE SCH 40 PVC EXCEPT WHERE OTHERWISE INDICATED. WHERE GALVANIZED RIGID STEEL CONDUIT (GRSC) IS SPECIFIED, FITTINGS SHALL BE THREADED TYPE. EXPOSED THREADS SHALL BE SEALED WITH APPROVED SEALANT TO PREVENT CORROSION PRIOR TO BACKFILL OPERATIONS. CONDUIT SHALL BE CLEANED OF DEBRIS, AND A NYLON PULL STRING SHALL BE INSTALLED IN ALL CONDUITS.

6. ALL EXTERIOR CONDUITS ENTERING BUILDINGS (EXCEPT THOSE WITH GROUNDING CONDUCTORS ONLY) SHALL HAVE EXPANSION COUPLINGS. AN APPROVED GROUND JUMPER SHALL BE INSTALLED BETWEEN METALLIC CONDUIT ON EACH SIDE OF COUPLING UNLESS COUPLING IS INTERNALLY GROUNDED.

7. FABRICATE AND INSTALL CONCRETE DUCT MARKERS IN ACCORDANCE WITH FAA-C-1391C. DUCT MARKERS SHALL BE DYED ORANGE AND INSTALLED AT THE MIDPOINT OF DUCT RUNS LONGER THAN 200 FEET, AT DUCT CHANGE OF DIRECTION, EACH SIDE OF RUNWAY, TAXIWAY OR ROAD CROSSING, WHERE INDICATED ON THE DRAWINGS, AND AS DIRECTED BY THE FAA RESIDENT ENGINEER OR COTR. TOP OF DUCT MARKERS SHALL EXTEND 1 INCH ABOVE FINISH GRADE.

8. BACKFILL FOR CABLE OR DUCT TRENCHES OR FOR OTHER EXCAVATIONS SHALL BE PLACED IN LAYERS NOT EXCEEDING 8 INCHES, AND EACH LAYER SHALL BE THOROUGHLY COMPACTED TO WITHIN 95% OF MAXIMUM DENSITY OF OPTIMUM MOISTURE CONTENT IN ACCORDANCE WITH AASHTO T-180. WHERE FILL IS REQUIRED IN THE RUNWAY/TAXIWAY SAFETY AREA, WORK SHALL COMPLY WITH FAA AC 150/5370-10. IF REQUIRED, THE CONTRACTOR SHALL ARRANGE FOR AN INDEPENDENT FIELD TEST TO VERIFY PROPER COMPACTION.

9. THE EXISTING GRADE SURROUNDING THE FOUNDATION OR TRENCH WORK SHALL BE STABILIZED AND PROTECTED FROM EROSION DURING AND IMMEDIATELY AFTER COMPLETION OF THE FOUNDATION OR CONDUIT INSTALLATION AND ALL REQUIRED EXCAVATION AND BACKFILL.

10. ALL DISTURBED AREAS SHALL BE RESTORED TO PRIOR CONDITION AT A MINIMUM. FINAL CONDITION SHALL BE APPROVED BY THE FAA AND THE AIRPORT AUTHORITY.

11. ANY WORK WITHIN 5 FEET OF FAA OR AIRPORT FACILITY SHALL BE HAND DUG.

DEMOLITION:

1. THE CONTRACTOR SHALL BACKFILL AND COMPACT ALL AREAS WHERE FOUNDATIONS HAVE BEEN REMOVED. ALL DISTURBED AREAS SHALL BE LOAMED, SEEDED AND THE FINISH GRADE SHALL MATCH THE SURROUNDING AREA.

FOUNDATION WORK:

1. ALL CONCRETE WORK SHALL COMPLY WITH ACI-304, "RECOMMENDED PRACTICE FOR MEASURING, MIXING, AND PLACING CONCRETE", ACI-308, "STANDARD PRACTICE FOR CURING CONCRETE", AND ACI-347, "RECOMMENDED PRACTICE FOR CONCRETE FORMWORK".

2. CONCRETE SHALL DEVELOP 3000 PSI COMPRESSIVE STRENGTH IN 28 DAYS WITH A MAXIMUM SLUMP OF 3 INCHES AND A MAXIMUM AGGREGATE SIZE OF 3/4 INCHES.

3. ALL REINFORCEMENT STEEL SHALL COMPLY WITH ASTM A615, GRADE 60.

4. ALL ANCHOR BOLTS AND OTHER HARDWARE SHALL BE GALVANIZED, UNLESS OTHERWISE INDICATED.

5. EXPANSION ANCHORS, IF USED, SHALL BE HILTI HSL HEAVY DUTY ANCHORS OR EQUAL AND SHALL BE INSTALLED IN ACCORDANCE WITH MANUFACTURER'S INSTRUCTIONS.

6. THE CONTRACTOR SHALL PREPARE THE BOTTOM OF ALL FOUNDATION EXCAVATIONS SUCH THAT THE FOUNDATION IS SET ON COMPACTED STRUCTURAL GRAVEL WITH A MINIMUM BEARING CAPACITY OF 3000 POUNDS PER SQUARE FOOT.

EQUIPMENT INSTALLATION:

1. ASSEMBLE AND INSTALL MALSR AND ASSOCIATED EQUIPMENT PER MANUFACTURER'S INSTRUCTIONS.

2. USE ANTI-SEIZE COMPOUND ON ALL THREADED PARTS.

3. ALL CHANNEL SHALL BE GALVANIZED METAL STRUT, UNLESS OTHERWISE INDICATED.

4. ALL HARDWARE SHALL BE GALVANIZED, UNLESS OTHERWISE INDICATED.

ELECTRICAL WORK:

1. ALL ELECTRICAL WORK SHALL CONFORM TO FAA-C-1217F (ELECTRICAL WORK, INTERIOR) AND FAA-C-1391C (INSTALLATION AND SPLICING OF UNDERGROUND CABLES) SPECIFICATIONS AND IN NO CASE SHALL VIOLATE THE NATIONAL ELECTRIC CODE (NFPA 70, NEC).

2. THE CONTRACTOR SHALL MAKE ALL POWER SERVICE, CONTROL, AND GROUND TERMINATIONS.

3. ALL FLEXIBLE LIQUIDTIGHT CONDUIT SHALL HAVE A CONTINUOUS COPPER BONDING CONDUCTOR.

4. ALL CONTROL/DATA CABLE SHALL BE TWISTED, SHIELDED.

5. ALL CIRCUITS SHALL HAVE INDIVIDUAL NEUTRAL AND GROUNDING CONDUCTORS. NO SHARED NEUTRALS OR GROUNDS WILL BE PERMITTED.

6. NEUTRAL CONDUCTORS SHALL REMAIN ISOLATED FROM GROUND IN ALL LOCATIONS EXCEPT AT POWER SERVICE ENTRANCE.

7. WHERE POSSIBLE, POWER CABLES AND CONTROL/DATA CABLES SHALL RUN IN CONDUIT INDEPENDENT OF EACH OTHER. SEPARATE POWER AND CONTROL/DATA CABLES IN COMMON HANDHOLES, ENCLOSURES, AND SHELTER SQUARE DUCT WIREWAY.

8. ALL CABLES SHALL BE PROPERLY COLOR CODED AND PERMANENTLY LABELED AT EACH END AND IN EACH HANDHOLE. ALL CABLES IN HANDHOLES SHALL BE LOOPED AROUND SEVERAL TIMES.

9. A DYNAMOMETER GRADUATED TO ACTUALLY INDICATE THE PROPER TENSION FOR ANY CABLE PULLED THROUGH UNDERGROUND CONDUIT OR DUCT SHALL BE USED UNLESS THE CONTRACTOR ADAPTS A HARNESS OF THE PROPER SIZED ROPE THAT WILL LIMIT THE TENSION OF THE PULL. ANY COMBINATION OF CABLES PULLED IN CONDUIT OR DUCT SHALL NOT EXCEED THE SUM OF THE INDIVIDUAL ALLOWABLE TENSION OF EACH CABLE PLUS 15%.

10. SPLICES SHALL BE AVOIDED TO THE MAXIMUM EXTENT POSSIBLE. HIGH VOLTAGE (5KV) SPLICES SHALL BE MADE ONLY WITH WRITTEN APPROVAL FROM THE COTR. ALL OTHER UNDERGROUND SPLICES SHALL BE LOCATED IN HANDHOLES ONLY AND AS APPROVED BY THE COTR.

11. PVC CONDUIT SHALL BE SCH 40 UNLESS OTHERWISE NOTED.

ELECTRICAL GROUNDING:

1. ALL ELECTRICAL AND ELECTRONICS GROUNDING SHALL MEET OR EXCEED ALL PROVISIONS OF THE LATEST EDITION OF: FAA-STD-019E, LIGHTNING AND SURGE PROTECTION, GROUNDING, BONDING AND SHIELDING REQUIREMENTS FOR FACILITIES AND ELECTRONIC EQUIPMENT; NFPA 70, NATIONAL ELECTRICAL CODE (NEC); NFPA 780, STANDARD FOR THE INSTALLATION OF LIGHTNING PROTECTION SYSTEMS.

2. ALL GROUND RODS SHALL BE COPPER CLAD STEEL, 3/4 INCH DIAMETER AND 10 FEET LONG. GROUND RODS SHALL BE DRIVEN SUCH THAT THE TOP OF ROD IS NO LESS THAN 12 INCHES BELOW GRADE.

3. ALL UNDERGROUND GROUND CONNECTIONS SHALL BE EXOTHERMICALLY WELDED UNLESS OTHERWISE INDICATED; WELD INTEGRITY SHALL BE VERIFIED BY A HAMMER TEST.

4. ALL UNDERGROUND GRSC SHALL BE GROUNDED BY A 2 AWG BARE COPPER GROUND EXOTHERMICALLY WELDED TO THE GRSC AND THE COUNTERPOISE.

5. UNDERGROUND GROUNDING CONDUCTORS SHALL BE 24 INCHES (MINIMUM) BELOW GRADE EXCEPT AT GROUND RODS AND AS OTHERWISE INDICATED.

6. ALL CABLE ARMOR SHALL BE GROUNDED AT BOTH ENDS.

7. ALL MULTI-PAIR CONTROL/DATA CABLE INDIVIDUAL SHIELDS SHALL BE GROUNDED AT ONE END.

8. ALL UNUSED MULTI-PAIR CONTROL/DATA CABLES SHALL BE GROUNDED AT BOTH ENDS.

9. WHEN INSTALLING MULTIPLE GROUND CONDUCTORS TO ONE GROUND LUG, THE CONTRACTOR SHALL USE A CONNECTOR (BURNDY FRAMATONE #YCHC OR EQUAL) AND A "PIGTAIL" TO SPLICE THE GROUNDS PRIOR TO CONNECTING TO THE LUG.

10. A 1/0 AWG BARE COPPER STRANDED GUARD WIRE SHALL BE INSTALLED OVER ALL BURIED CABLES AND CONDUCTORS NOT ROUTED IN GALVANIZED RIGID STEEL CONDUIT. THE GUARD WIRE SHALL BE EMBEDDED IN THE SOIL, A MINIMUM OF 10 INCHES ABOVE THE CABLE TO BE PROTECTED, AND LOCATED DIRECTLY ABOVE AND PARALLEL TO THE LINES OR CABLES BEING PROTECTED. THE GUARD WIRE SHALL BE BONDED TO THE EARTH ELECTRODE SYSTEM (EES) AT EACH END AND TO GROUND RODS AT APPROXIMATELY 90-FOOT INTERVALS USING EXOTHERMIC WELDS. THE SPACING BETWEEN GROUND RODS SHALL VARY BY 10% TO 20% TO PREVENT RESONANCE. GROUND RODS SHALL BE INSTALLED APPROXIMATELY 6 FEET ON EITHER SIDE OF THE TRENCH. WHERE CABLES RUN ADJACENT TO THE EDGE OF A RUNWAY, THEY SHALL BE LOCATED 10 FEET FROM THE RUNWAY EDGE LIGHTS ON THE OUTSIDE OF THE EDGE LIGHTS.

11. WHENEVER A NEW COUNTERPOISE OR GUARD WIRE CROSSES AN EXISTING COUNTERPOISE OR GUARD WIRE, THE TWO SHALL BE EXOTHERMICALLY WELDED.

TESTING:

1. THE CONTRACTOR SHALL TEST ALL EQUIPMENT AND CABLES AS REQUIRED.

2. VOLTAGE TESTS, INSULATION TESTS, AND GROUND RESISTANCE TESTS SHALL BE CONDUCTED ON ALL CONDUCTORS (AS APPROPRIATE) IN THE PRESENCE OF THE RE. TESTS CONDUCTED WITHOUT RE PRESENT WILL BE REJECTED.

3. ALL TESTS RESULTS SHALL BE FORWARDED TO THE RE IN A FAA SPECIFIED FORMAT.

Record Drawings
Work completed in general conformance with contract plans.

REV	APPROVED DATE	DESCRIPTION	JCN	REDLINE DATE	APVD
	05/20/2013	CONSTRUCTION, WR #12507 (DG)	992395	10/02/2012	

DEPARTMENT OF TRANSPORTATION
FEDERAL AVIATION ADMINISTRATION
ATO - TECHNICAL OPERATIONS — EASTERN SERVICE AREA

MALSR
RUNWAY 19
GENERAL NOTES

RUTLAND — RUTLAND - SOUTHERN VERMONT REGIONAL AIRPORT — VT

REVIEWED BY	SUBMITTED BY	APPROVED BY
	D.L. WEEKS DO NOT SIGN	P. KIRBY DO NOT SIGN
	PROJECT ENGINEER	MGR: CONSTRUCTION - CENTER C

DESIGNED DLW	ISSUED BY	DATE 05/20/2013	JCN 992395
DRAWN DG	ENGINEERING SERVICES NAVAIDS	DRAWING NO RUT-NEZ120015-G003	REV
CHECKED DLW			

ISSUED FOR: CONSTRUCTION

PROJECT RECORD DRAWINGS
THIS DRAWING PRODUCED ON NEW ENGLAND REGION MICROSTATION SYSTEM

11/14/2013 10:10:03 AM Plotted by: Linda CTR Lapke

EDN: rut-nez120015-g003.dgn

Record Drawing
Work completed in general conformance with plans. Finished manhole and tower locations are shown on Attachment A: Construction Survey Record Plan

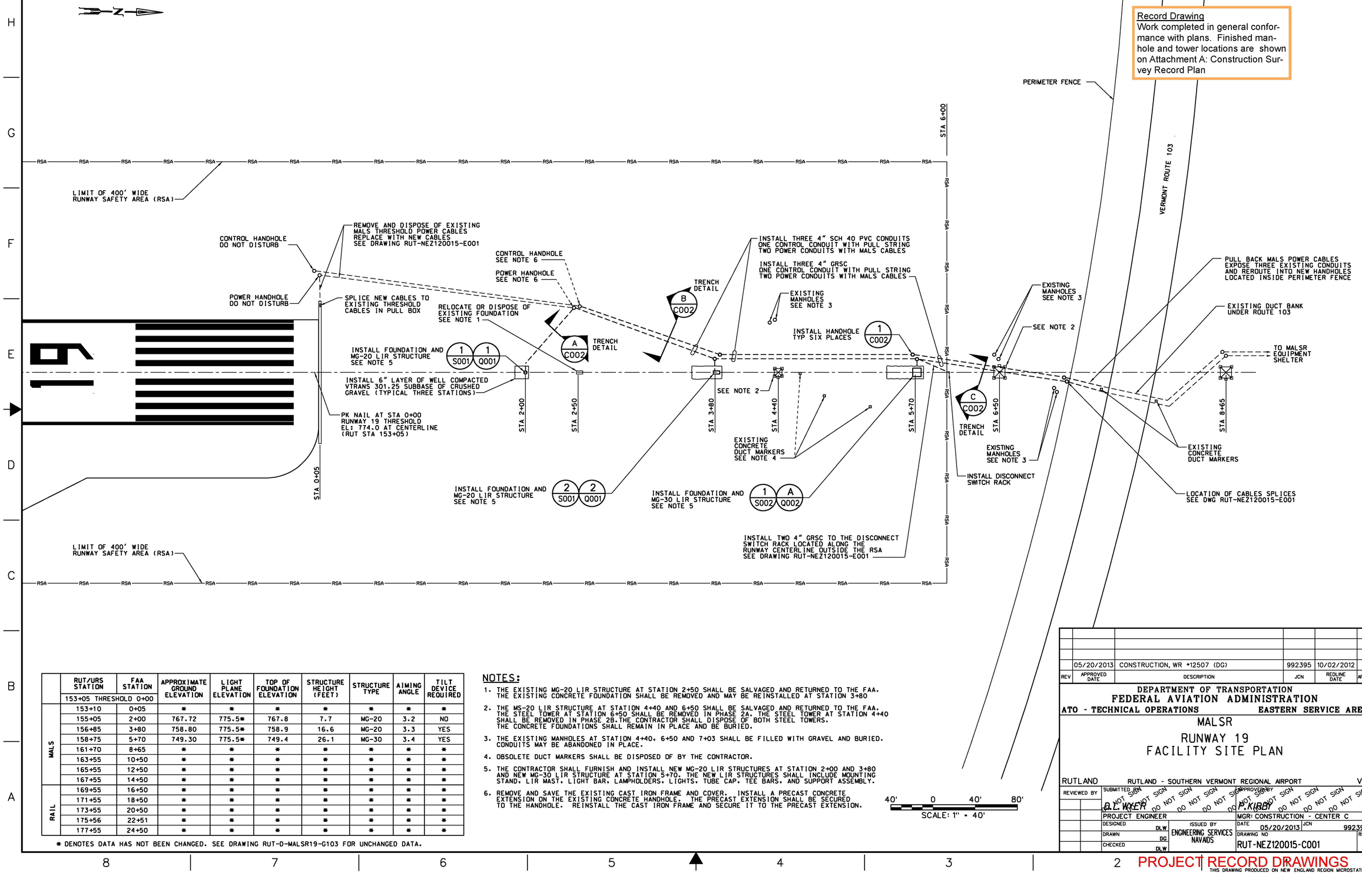

	RUT/URS STATION	FAA STATION	APPROXIMATE GROUND ELEVATION	LIGHT PLANE ELEVATION	TOP OF FOUNDATION ELEVATION	STRUCTURE HEIGHT (FEET)	STRUCTURE TYPE	AIMING ANGLE	TILT DEVICE REQUIRED
	153+05 THRESHOLD	0+00							
MALS	153+10	0+05	*	*	*	*	*	*	*
	155+05	2+00	767.72	775.5*	767.8	7.7	MG-20	3.2	NO
	156+85	3+80	758.80	775.5*	758.9	16.6	MG-20	3.3	YES
	158+75	5+70	749.30	775.5*	749.4	26.1	MG-30	3.4	YES
	161+70	8+65	*	*	*	*	*	*	*
	163+55	10+50	*	*	*	*	*	*	*
	165+55	12+50	*	*	*	*	*	*	*
	167+55	14+50	*	*	*	*	*	*	*
RAIL	169+55	16+50	*	*	*	*	*	*	*
	171+55	18+50	*	*	*	*	*	*	*
	173+55	20+50	*	*	*	*	*	*	*
	175+56	22+51	*	*	*	*	*	*	*
	177+55	24+50	*	*	*	*	*	*	*

* DENOTES DATA HAS NOT BEEN CHANGED. SEE DRAWING RUT-D-MALSR19-G103 FOR UNCHANGED DATA.

NOTES:

1. THE EXISTING MG-20 LIR STRUCTURE AT STATION 2+50 SHALL BE SALVAGED AND RETURNED TO THE FAA. THE EXISTING CONCRETE FOUNDATION SHALL BE REMOVED AND MAY BE REINSTALLED AT STATION 3+80
2. THE MG-20 LIR STRUCTURE AT STATION 4+40 AND 6+50 SHALL BE SALVAGED AND RETURNED TO THE FAA. THE STEEL TOWER AT STATION 6+50 SHALL BE REMOVED IN PHASE 2A. THE STEEL TOWER AT STATION 4+40 SHALL BE REMOVED IN PHASE 2B.THE CONTRACTOR SHALL DISPOSE OF BOTH STEEL TOWERS. THE CONCRETE FOUNDATIONS SHALL REMAIN IN PLACE AND BE BURIED.
3. THE EXISTING MANHOLES AT STATION 4+40. 6+50 AND 7+03 SHALL BE FILLED WITH GRAVEL AND BURIED. CONDUITS MAY BE ABANDONED IN PLACE.
4. OBSOLETE DUCT MARKERS SHALL BE DISPOSED OF BY THE CONTRACTOR.
5. THE CONTRACTOR SHALL FURNISH AND INSTALL NEW MG-20 LIR STRUCTURES AT STATION 2+00 AND 3+80 AND NEW MG-30 LIR STRUCTURE AT STATION 5+70. THE NEW LIR STRUCTURES SHALL INCLUDE MOUNTING STAND. LIR MAST. LIGHT BAR. LAMPHOLDERS. LIGHTS. TUBE CAP. TEE BARS. AND SUPPORT ASSEMBLY.
6. REMOVE AND SAVE THE EXISTING CAST IRON FRAME AND COVER. INSTALL A PRECAST CONCRETE EXTENSION ON THE EXISTING CONCRETE HANDHOLE. THE PRECAST EXTENSION SHALL BE SECURED TO THE HANDHOLE. REINSTALL THE CAST IRON FRAME AND SECURE IT TO THE PRECAST EXTENSION.

40' 0 40' 80'
SCALE: 1" = 40'

REV	APPROVED DATE	DESCRIPTION	JCN	REDLINE DATE	APVD
	05/20/2013	CONSTRUCTION, WR #12507 (DG)	992395	10/02/2012	

DEPARTMENT OF TRANSPORTATION
FEDERAL AVIATION ADMINISTRATION
ATO - TECHNICAL OPERATIONS EASTERN SERVICE AREA

MALSR
RUNWAY 19
FACILITY SITE PLAN

RUTLAND RUTLAND - SOUTHERN VERMONT REGIONAL AIRPORT VT

REVIEWED BY	SUBMITTED BY DO NOT SIGN	APPROVED BY DO NOT SIGN	
	B.L. WOLEY	P.KIRBY	
	PROJECT ENGINEER	MGR: CONSTRUCTION - CENTER C	
	DESIGNED DLW	ISSUED BY ENGINEERING SERVICES NAVAIDS	DATE 05/20/2013 JCN 992395
	DRAWN DG		DRAWING NO RUT-NEZ120015-C001 REV
	CHECKED DLW		

ISSUED FOR CONSTRUCTION

PROJECT RECORD DRAWINGS
THIS DRAWING PRODUCED ON NEW ENGLAND REGION MICROSTATION SYSTEM

11/14/2013 10:09:35 AM Plotted by:Linda CTR Lapko
EDM: rut-nez120015-c001.dgn

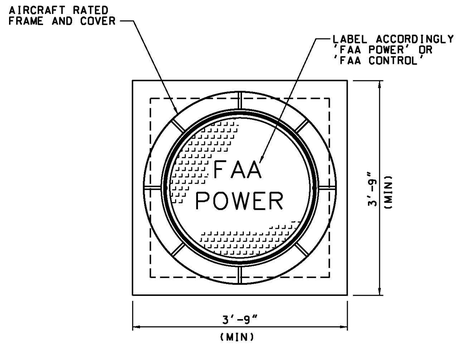

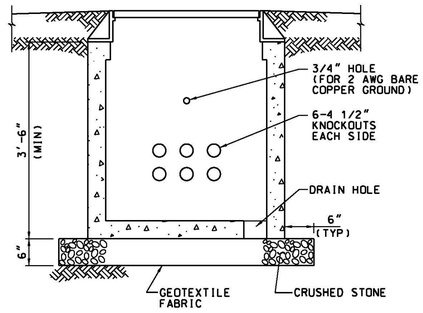

HANDHOLE NOTES:

1. CONCRETE COMPRESSIVE STRENGTH - 5,000 PSI MINIMUM.
2. STEEL REINFORCEMENT - ASTM A615, GRADE 60, 1" MINIMUM COVER.
3. MINIMUM DESIGN LOAD - 70,000 LBS DUAL WHEEL LOADING OR AASHTO HS20-44 AT A MINIMUM.
4. CAST GRAY IRON HANDHOLE FRAME AND COVER SHALL BE NEENAH AIRPORT CASTING R-3492 SERIES OR APPROVED EQUAL.
5. CAST IRON FRAME SHALL BE MECHANICALLY FASTENED TO THE HANDHOLE.
6. A PULLEYE SHALL BE PROVIDED ON EACH WALL.
7. INSTALL A CRUSHED STONE SUMP UNDER ALL HANDHOLES. TOP, SIDES AND BOTTOM OF SUMP SHALL BE LINED WITH A WATER PERMEABLE GEOTEXTILE FABRIC.
8. AFTER INSTALLATION OF CONDUITS THROUGH KNOCKOUTS, GROUT AROUND CONDUIT.
9. CABLE SLACK LOOPS SHALL BE LABELED AND RACKED IN ALL HANDHOLES.
10. INSTALL ONE 3/4", 10 FOOT LONG GROUND ROD AT EACH HANDHOLE OR SET OF ADJACENT HANDHOLES. BOND THIS GROUND ROD TO EITHER THE GRSC OR THE 1/0 AWG BARE COPPER GUARD WIRE OVER ANY PVC CONDUIT.
11. HANDHOLE MAY BE LOCATED INSIDE OF THE RUNWAY SAFETY AREA (RSA).

Record Drawings
Work completed in general conformance with contract plans.

1 / C001 TYPICAL HANDHOLE DETAIL INSIDE RSA
NOT TO SCALE

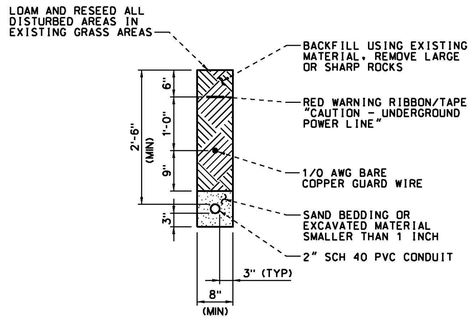

A / C001 TRENCH DETAIL
SCALE: 3/4" = 1'-0"

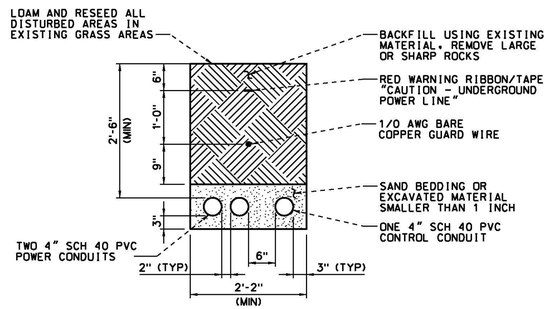

B / C001 TRENCH DETAIL
SCALE: 3/4" = 1'-0"

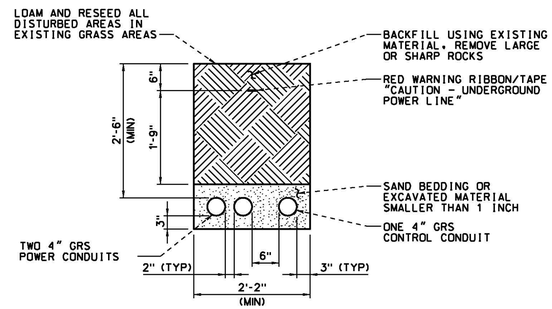

C / C001 TRENCH DETAIL
SCALE: 3/4" = 1'-0"

NOTES:

1. PROVIDE SIX INCH (MINIMUM) CLEAR DISTANCE BETWEEN POWER AND CONTROL OR SIGNAL CONDUITS. PROVIDE SIX INCH (MINIMUM) CLEAR DISTANCE BETWEEN POWER AND HIGH VOLTAGE CONDUITS. PROVIDE SIX INCH (MINIMUM) CLEAR DISTANCE BETWEEN HIGH VOLTAGE AND CONTROL OR SIGNAL CONDUITS.
2. FOR INSTALLATION OF GUARD WIRE AND GROUND ROD SPACING, SEE DRAWING RUT-NEZ120015-G003, NOTE 10 UNDER ELECTRICAL GROUNDING.

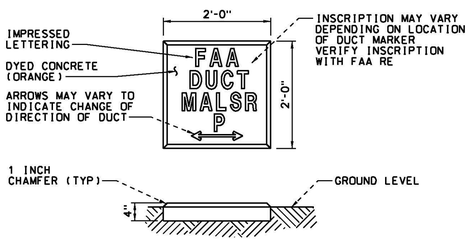

2 / C002 CONCRETE DUCT MARKER
SCALE: 3/4" = 1'-0"

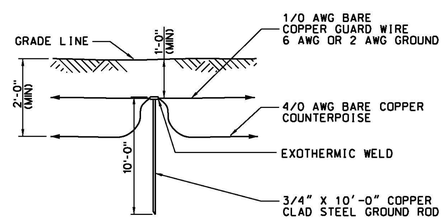

3 / C002 TYPICAL GROUND ROD INSTALLATION
NOT TO SCALE (SEE NOTE 2)

1' 0 1' 2' 3'
SCALE: 3/4" = 1'-0"

REV	APPROVED DATE	DESCRIPTION	JCN	REDLINE DATE	APVD
	05/20/2013	CONSTRUCTION, WR #12507 (DG)	992395	10/02/2012	

DEPARTMENT OF TRANSPORTATION
FEDERAL AVIATION ADMINISTRATION
ATO - TECHNICAL OPERATIONS — EASTERN SERVICE AREA

MALSR
RUNWAY 19
MISCELLANEOUS DETAILS

RUTLAND — RUTLAND - SOUTHERN VERMONT REGIONAL AIRPORT — VT

REVIEWED BY	SUBMITTED	APPROVED BY
	D.L. WOLFE PROJECT ENGINEER	P.KIRBY MGR: CONSTRUCTION - CENTER C

DESIGNED DLW | DRAWN DG | CHECKED DLW
ISSUED BY: ENGINEERING SERVICES NAVAIDS
DATE 05/20/2013 JCN 992395
DRAWING NO RUT-NEZ120015-C002 REV

ISSUED FOR: CONSTRUCTION

PROJECT RECORD DRAWINGS
THIS DRAWING PRODUCED ON NEW ENGLAND REGION MICROSTATION SYSTEM

11/14/2013 10:09:45 AM Plotted by:Linda CTR LoPo
EDM: rut-nez120015-c002.dgn

ENTRANCE TO VTRANS MAINTENANCE GARAGE COMPLEX
FENCE
FENCE
GATE
GRASS
EFGS EQUIPMENT SHELTER
CENTRAL HANDHOLE
2 C003 INSTALL SIGN
EXISTING GRAVEL ROAD
LIMIT OF 400' WIDE RUNWAY SAFETY AREA (RSA)
BEGIN CONSTRUCTION OF 12' WIDE GRAVEL ACCESS ROAD ABEAM THE END-FIRE GLIDE SLOPE (EFGS) FIELD MONITOR ANTENNA
2 C003 INSTALL SIGN
INSTALL APPROXIMATELY 970 LINEAR FEET OF 12' WIDE GRAVEL ACCESS ROAD AND TURN-AROUND
A C003
INSTALL SCH 80 PVC CONDUIT UNDER GRAVEL ACCESS ROAD (TYP 2 PLACES)
INSTALL 12'X 24' GRAVEL TURN-AROUND
STA 6+00
STA 5+70
STA 3+80
STA 2+00
STA 0+05
TAPING POINT "TR"
PHASE CENTER "PC"
TAPING POINT "TF"
EFGS REAR ANTENNA SITE
CLEARANCE ANTENNA SITE
THEODOLITE MARKER "TM"
EFGS FRONT ANTENNA SITE
FIELD MONITOR ANTENNA SITE
CENTERLINE OF RUNWAY 1-19
PK NAIL STA 0+00 RUNWAY 19 THRESHOLD EL: 774.0 AT CENTERLINE (RUT STA 153+05)
TAXIWAY E
LIMIT OF 400' WIDE RUNWAY SAFETY AREA (RSA)

AREA 2
Relocate MALSR Maintenance Road outside of RSA including localized grading and fill

AREA 1
Remove top course of gravel and place AC pavement to match grade

Record Drawing
Finished grades and MALSR access road location are shown on Attachment A: Construction Survey Record Plan

ILS CRITICAL AREA PERIMETER SIGN (24"x18"x1/16"± ALUMINUM)
WARNING
ILS CRITICAL AREA
DO NOT STOP
YELLOW BACKGROUND
BLACK LETTERS (TYP)
15'-0" ABOVE GRADE
5'-0" GALVANIZED STEEL C-CHANNEL SIGN POST
BREAKAWAY POINT
SIGN POST LAP SPLICE KIT
FINISHED GRADE
3" MAX
3'-0" BAKED ENAMEL SIGN POST BASE
9'-0" BELOW GRADE
TWO SIGNS REQUIRED ONE EACH SIDE OF CRITICAL AREA

2 C003 SIGN DETAIL
SCALE: 3/4" = 1'-0"

1 C003 PLAN - GRAVEL ACCESS ROAD
SCALE: 1"=60'-0"

REMOVE EXISTING TOPSOIL TO GRAVEL BASE MATERIAL. INSTALL 10" (MINIMUM) VTRANS 301.25 SUBBASE OF CRUSHED GRAVEL IN 8" LIFTS AND COMPACT. TOP OF ROAD TO MATCH SURFACE GRADES.
COMPACTED SUBGRADE

A C003 GRAVEL ACCESS ROAD DETAIL
NOT TO SCALE

MALSR ACCESS ROAD CHANGE ORDER

AREA 1
Remove 2" crushed gravel and place 2" bituminous concrete pavement VTrans Item 406.25 Type III. Grade to maintain RSA drainage and match existing.

AREA 2
Fill and compact suitable fill as subgrade for access road. Place 12" VTrans Item 301.25 Subbase of Crushed Gravel in 8" max compacted lifts. Place 2" bituminous concrete pavement VTrans Item 406.25 Type III.

60' 0 60' 120'
SCALE: 1" = 60'

REV	APPROVED DATE	DESCRIPTION	JCN	REDLINE DATE	APVD
	05/20/2013	CONSTRUCTION, WR #12507 (RUT)	992395	10/02/2012	

DEPARTMENT OF TRANSPORTATION
FEDERAL AVIATION ADMINISTRATION
ATO - TECHNICAL OPERATIONS EASTERN SERVICE AREA

MALSR
RUNWAY 19
GRAVEL ACCESS ROAD

RUTLAND RUTLAND - SOUTHERN VERMONT REGIONAL AIRPORT VT

REVIEWED BY	SUBMITTED BY D.L. WEEKS PROJECT ENGINEER	APPROVED BY P. KIRBY MGR: CONSTRUCTION - CENTER C	
	DESIGNED DLW	ISSUED BY ENGINEERING SERVICES NAVAIDS	DATE 05/20/2013 JCN 992395
	DRAWN DG		DRAWING NO RUT-NEZ120015-C003 REV
	CHECKED DLW		

PROJECT RECORD DRAWINGS
THIS DRAWING PRODUCED ON NEW ENGLAND REGION MICROSTATION SYSTEM

ISSUED FOR: CONSTRUCTION

11/14/2013 10:09:49 AM Plotted by: Linda CTR Lojko

EDM: ru1-nez120015-c003.dgn

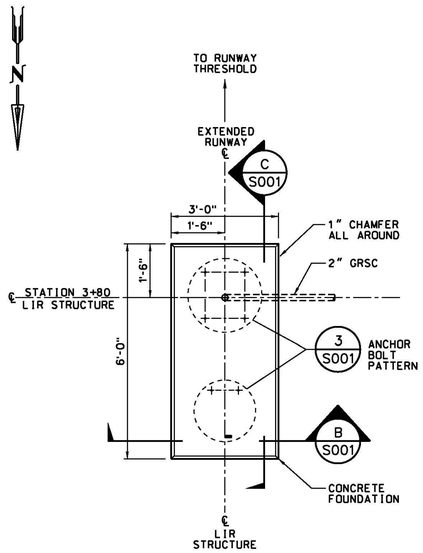

2 C001 Q001 PLAN - MG-20 (TILT-DOWN) LIR FOUNDATION AT STATION 3+80
SCALE: 1/2" = 1'-0"

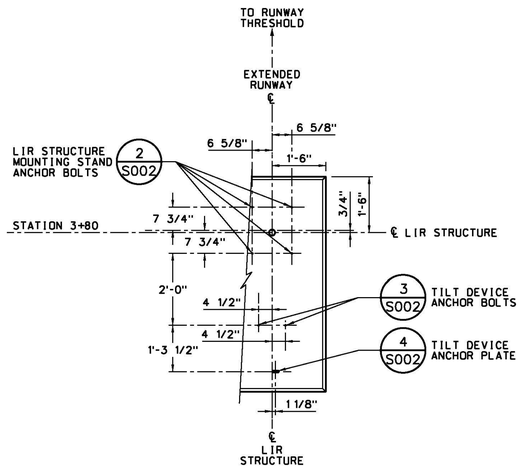

3 S001 PLAN - MG-20 (TILT-DOWN) LIR STRUCTURE ANCHOR BOLT PATTERN
SCALE: 1/2" = 1'-0"

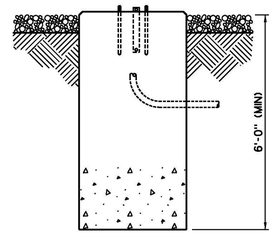

B S001 SECTION - MG-20 (TILT-DOWN) LIR FOUNDATION
SCALE: 1/2" = 1'-0"

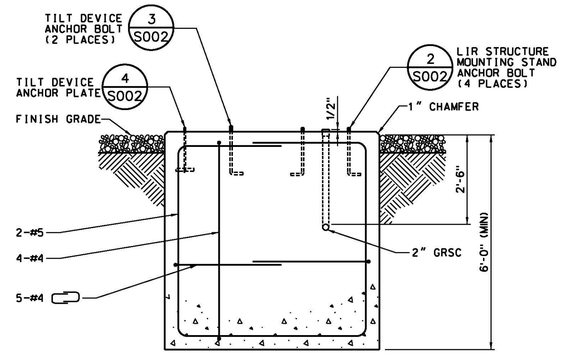

C S001 SECTION - MG-20 (TILT-DOWN) LIR FOUNDATION
SCALE: 1/2" = 1'-0"

Record Drawings
Work completed in general conformance with contract plans.

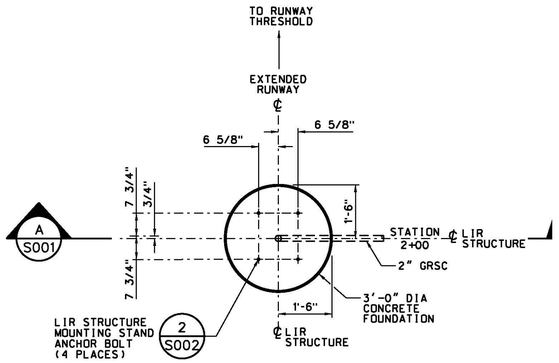

1 C001 Q001 PLAN - MG-20 (TILT-DOWN) LIR FOUNDATION AT STATION 2+00
SCALE: 1/2" = 1'-0"

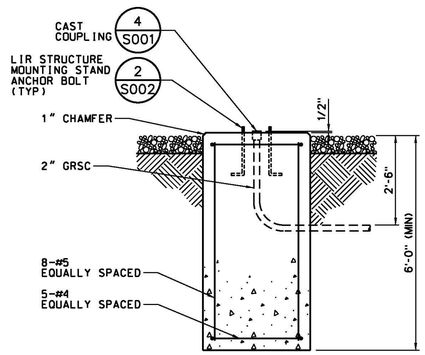

A S001 SECTION - MG-20 (TILT-DOWN) LIR FOUNDATION
SCALE: 1/2" = 1'-0"

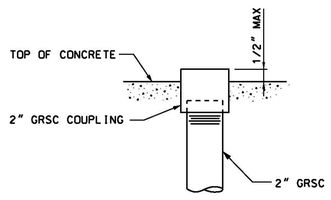

4 S001 S002 CAST COUPLING
SCALE: 3" = 1'-0"

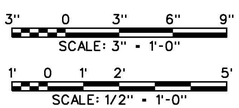

NOTES:

1. CONCRETE SHALL DEVELOP 3000 PSI IN 28 DAYS WITH A MAXIMUM SLUMP OF 3 INCHES AND A MAXIMUM AGGREGATE SIZE OF 3/4 INCHES. ALL CONCRETE WORK SHALL COMPLY WITH ACI-304. "RECOMMENDED PRACTICE FOR MEASURING, MIXING, AND PLACING CONCRETE"; ACI-308. "STANDARD PRACTICE FOR CURING CONCRETE"; AND ACI-347. "RECOMMENDED PRACTICE FOR CONCRETE FORMWORK".
2. ALL REINFORCEMENT STEEL SHALL COMPLY WITH ASTM A615, GRADE 60.
3. THE CONTRACTOR SHALL PREPARE THE BOTTOM OF THE FOUNDATION EXCAVATION SUCH THAT THE FOUNDATION IS SET ON COMPACTED STRUCTURAL GRAVEL WITH A MINIMUM BEARING CAPACITY OF 3000 POUNDS PER SQUARE FOOT.

REV	APPROVED DATE	DESCRIPTION	JCN	REDLINE DATE	APVD
	05/20/2013	CONSTRUCTION, WR #12507 (DG)	992395	10/02/2012	

DEPARTMENT OF TRANSPORTATION
FEDERAL AVIATION ADMINISTRATION
ATO - TECHNICAL OPERATIONS EASTERN SERVICE AREA

MALSR

RUNWAY 19
FOUNDATION DESIGN - MG-20 LIR STRUCTURE STATION 2+00 AND 3+80

RUTLAND RUTLAND - SOUTHERN VERMONT REGIONAL AIRPORT VT

REVIEWED BY	SUBMITTED BY	APPROVED BY
	D.L. WEEK	P. KIRBY
	PROJECT ENGINEER	MGR: CONSTRUCTION - CENTER C

DESIGNED	DLW	ISSUED BY	DATE	JCN
DRAWN	DG	ENGINEERING SERVICES NAVAIDS	05/20/2013	992395
CHECKED	DLW		DRAWING NO	REV
			RUT-NEZ120015-S001	

PROJECT RECORD DRAWINGS
THIS DRAWING PRODUCED ON NEW ENGLAND REGION MICROSTATION SYSTEM

ISSUED FOR: CONSTRUCTION

11/14/2013 10:10:20 AM Plotted by: Linda CTR Lojko

EDMS: rut-nez120015-s001.dgn

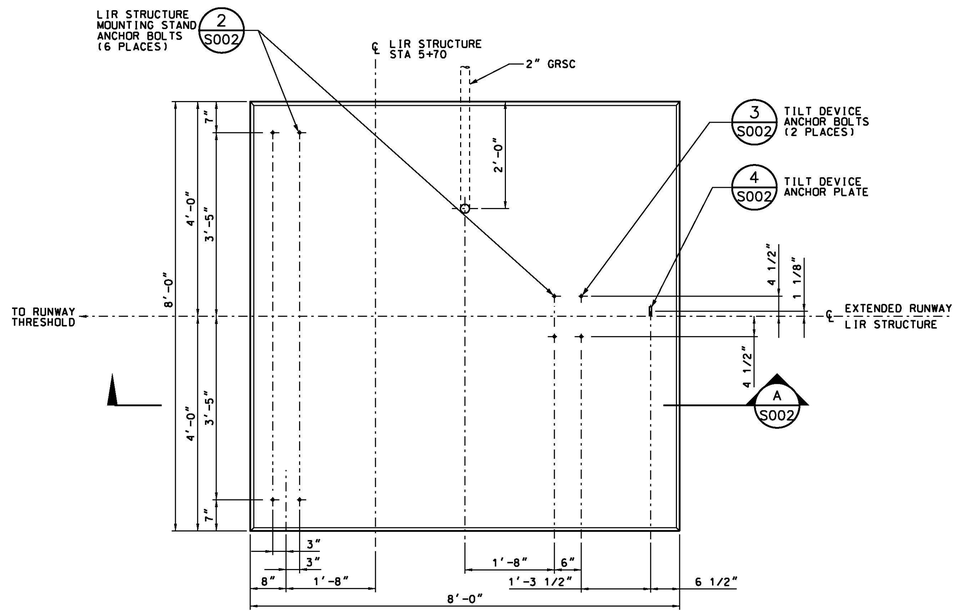

1 C001 Q002 PLAN - MG-30 FOUNDATION AT STATION 5+70
SCALE: 3/4" = 1'-0"

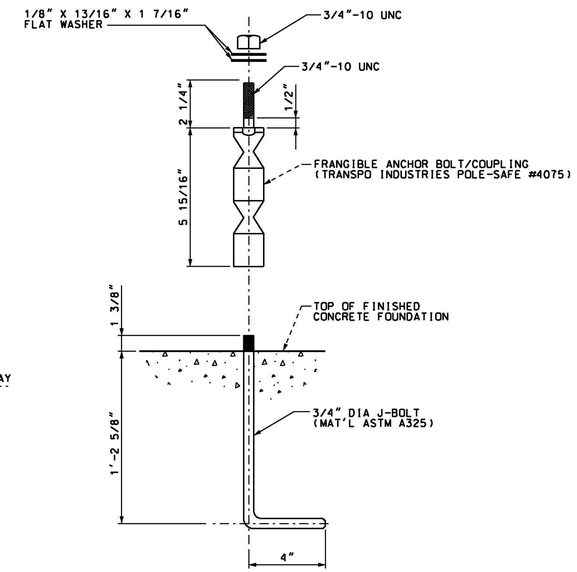

2 S001 S002 LIR STRUCTURE FRANGIBLE ANCHOR BOLT
NOT TO SCALE SEE NOTE 4

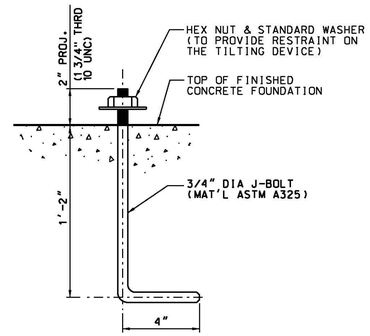

3 S001 S002 TILT DEVICE ANCHOR BOLT
NOT TO SCALE SEE NOTE 4

Record Drawings
Work completed in general conformance with contract plans.

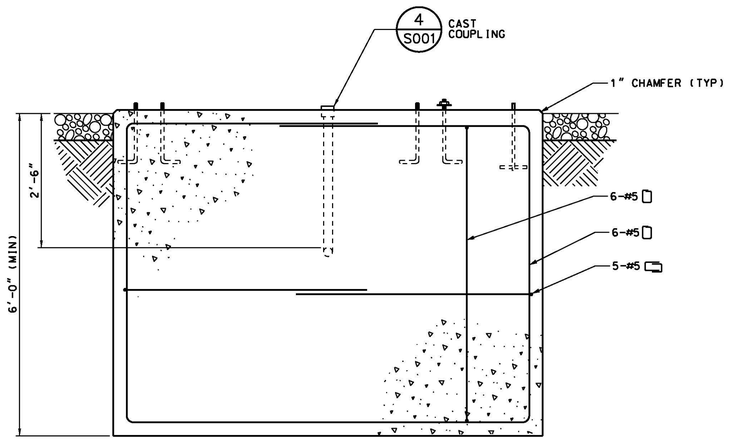

A S002 SECTION - MG-30 FOUNDATION
SCALE: 3/4" = 1'-0"

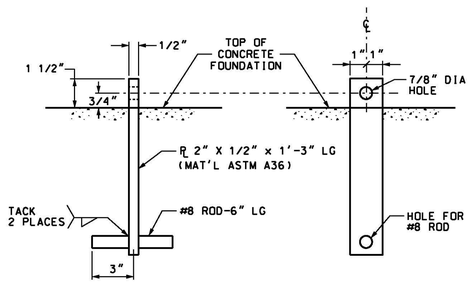

4 S001 S002 TILT DEVICE ANCHOR PLATE DETAIL
NOT TO SCALE

1' 0 1' 2' 3'
SCALE: 3/4" = 1'-0"

NOTES:

1. CONCRETE SHALL DEVELOP 3000 PSI IN 28 DAYS WITH A MAXIMUM SLUMP OF 3 INCHES AND A MAXIMUM AGGREGATE SIZE OF 3/4 INCHES. ALL CONCRETE WORK SHALL COMPLY WITH ACI-304, "RECOMMENDED PRACTICE FOR MEASURING, MIXING, AND PLACING CONCRETE"; ACI-308, "STANDARD PRACTICE FOR CURING CONCRETE"; AND ACI-347, "RECOMMENDED PRACTICE FOR CONCRETE FORMWORK".
2. ALL REINFORCEMENT STEEL SHALL COMPLY WITH ASTM A615, GRADE 60.
3. THE CONTRACTOR SHALL PREPARE THE BOTTOM OF THE FOUNDATION EXCAVATION SUCH THAT THE FOUNDATION IS SET ON COMPACTED STRUCTURAL GRAVEL WITH A MINIMUM BEARING CAPACITY OF 3000 POUNDS PER SQUARE FOOT.
4. IN LIEU OF CAST-IN-PLACE ANCHOR BOLTS FOR MG-20 AND MG-30 LIR STRUCTURES, THE CONTRACTOR MAY INSTALL 3/4" STAINLESS STEEL THREADED RODS SET IN TWO-PART EPOXY COMPOUND. THREADED RODS SHALL BE EMBEDDED A MINIMUM DEPTH OF 10" BELOW THE TOP OF CONCRETE.

REV	APPROVED DATE	DESCRIPTION	JCN	REDLINE DATE	APVD
	05/20/2013	CONSTRUCTION, WR #12507 (DG)	992395	10/02/2012	

DEPARTMENT OF TRANSPORTATION
FEDERAL AVIATION ADMINISTRATION
ATO - TECHNICAL OPERATIONS EASTERN SERVICE AREA

MALSR
RUNWAY 19
FOUNDATION DESIGN - MG-30 LIR STRUCTURE
STATION 5+70

RUTLAND — RUTLAND - SOUTHERN VERMONT REGIONAL AIRPORT — VT

REVIEWED BY	SUBMITTED BY	APPROVED BY
	D.L. WEEK (DO NOT SIGN)	P.KIRBY (DO NOT SIGN)
	PROJECT ENGINEER	MGR: CONSTRUCTION - CENTER C

DESIGNED	DLW	ISSUED BY	DATE	05/20/2013	JCN	992395
DRAWN	DG	ENGINEERING SERVICES NAVAIDS	DRAWING NO	RUT-NEZ120015-S002		REV
CHECKED	DLW					

ISSUED FOR: CONSTRUCTION

PROJECT RECORD DRAWINGS
THIS DRAWING PRODUCED ON NEW ENGLAND REGION MICROSTATION SYSTEM

11/14/2013 10:10:24 AM Plotted by: Linda CTR Lopko
EDMS: rut-nez120015-s002.dgn

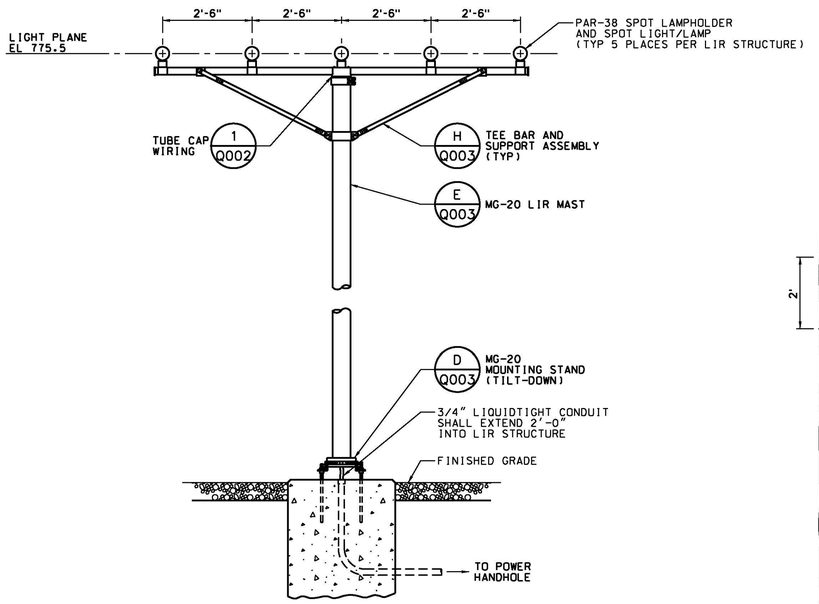

A Q001 ELEVATION - MG-20 (TILT-DOWN) LIR STRUCTURE
SCALE: 1/2" = 1'-0"

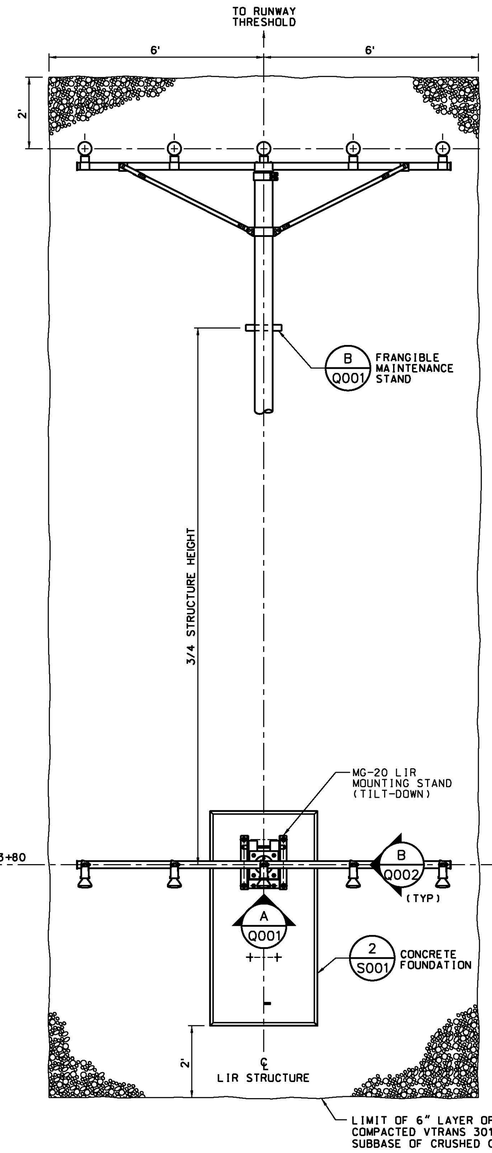

2 C001 PLAN - MALS MG-20 (TILT DOWN) LIR STRUCTURE WITH TILT DEVICE
SCALE: 1/2" = 1'-0"

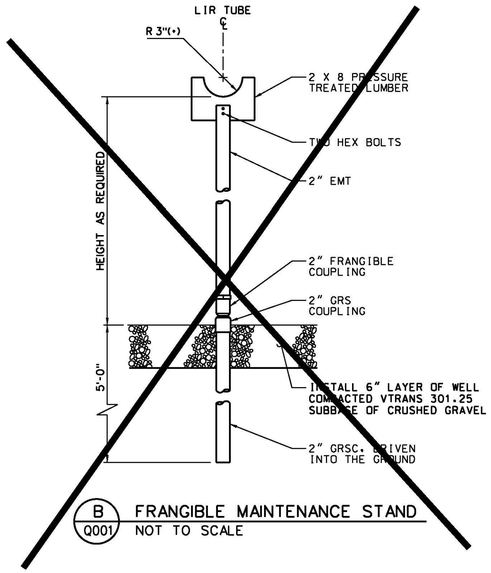

B Q001 FRANGIBLE MAINTENANCE STAND
NOT TO SCALE

Record Drawings
Work completed in general conformance with contract plans.

Record Drawings
Contractor supplied removable maintenance stand in lieu of above with FAA Tech Ops concurrence of acceptability

1' 0 1' 2' 5'
SCALE: 1/2" = 1'-0"

NOTES:

1. MOUNTING AND LEVELING HARDWARE FOR MG-20 LIR TOWER MOUNTING STAND SHALL BE 3/4 INCH GALVANIZED OR STAINLESS STEEL.
2. SUFFICIENT CABLE LENGTH SHALL BE COILED INSIDE LIR STRUCTURE TO ALLOW FOR RAISING AND LOWERING OF STRUCTURE WITHOUT STRAINING CABLES.
3. ANTI-SEIZE COMPOUND SHALL BE APPLIED TO ALL THREADED CONNECTIONS.

REV	APPROVED DATE	DESCRIPTION	JCN	REDLINE DATE	APVD
	05/20/2013	CONSTRUCTION, WR #12507 (DG)	992395	10/02/2012	

DEPARTMENT OF TRANSPORTATION
FEDERAL AVIATION ADMINISTRATION
ATO - TECHNICAL OPERATIONS EASTERN SERVICE AREA

MALSR
RUNWAY 19
EQUIPMENT INSTALLATION
STATION 2+00 AND 3+80

RUTLAND RUTLAND - SOUTHERN VERMONT REGIONAL AIRPORT VT

REVIEWED BY	SUBMITTED	APPROVED BY
	D.L. WOLFE	P. KIRBY
	PROJECT ENGINEER	MGR: CONSTRUCTION - CENTER C
	DESIGNED DLW	ISSUED BY: ENGINEERING SERVICES NAVAIDS
	DRAWN DG	DATE 05/20/2013 JCN 992395
	CHECKED DLW	DRAWING NO RUT-NEZ120015-Q001 REV

ISSUED FOR: CONSTRUCTION

11/14/2013 10:10:08 AM Plotted by:Linda CTR Lopko

EDM: rut-nez120015-q001.dgn

PROJECT RECORD DRAWINGS
THIS DRAWING PRODUCED ON NEW ENGLAND REGION MICROSTATION SYSTEM

Record Drawings
Work completed in general conformance with contract plans.

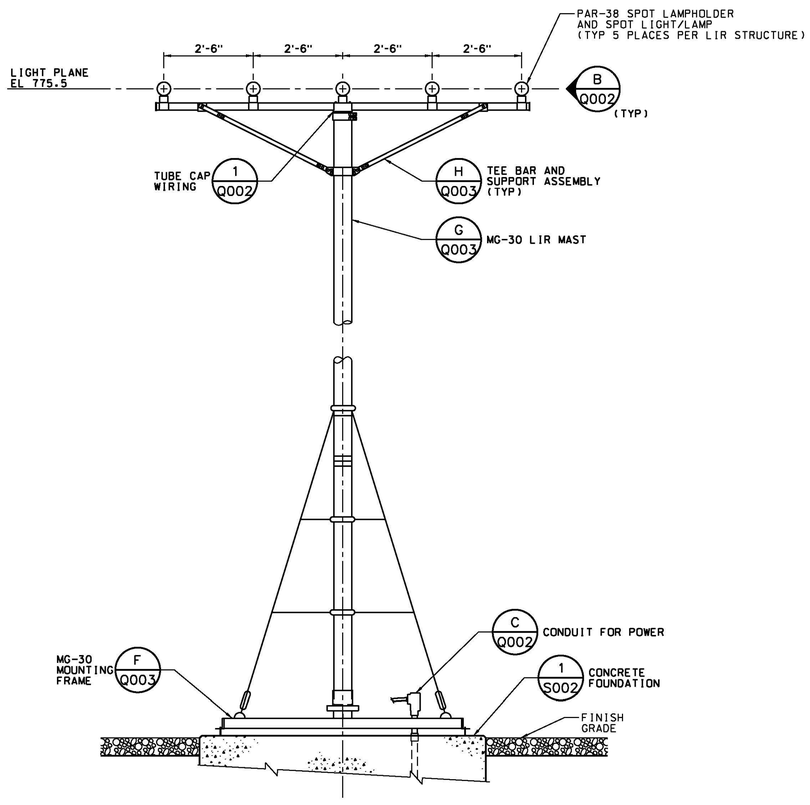

A C001 ELEVATION - STATION 5+70 MG-30 LOW IMPACT RESISTANT STRUCTURE
SCALE: 1/2" = 1'-0"

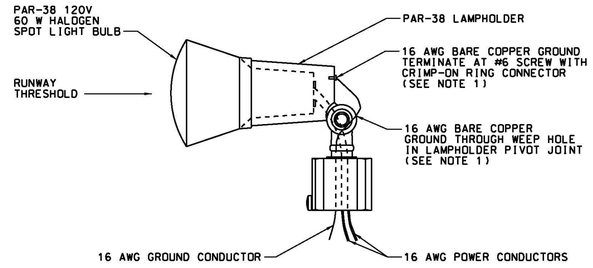

B Q001 Q002 PAR-38 LIGHT FIXTURE - SIDE ELEVATION
NOT TO SCALE

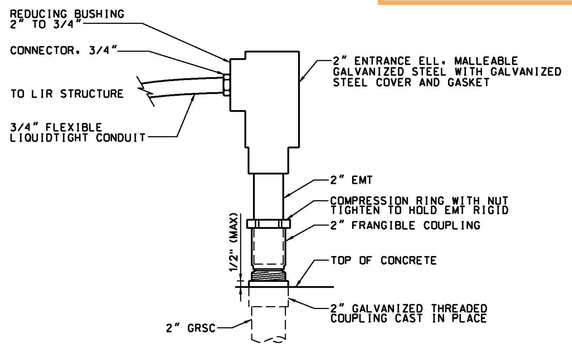

C Q002 GRSC COUPLING TO LIQUIDTIGHT DETAIL
NOT TO SCALE

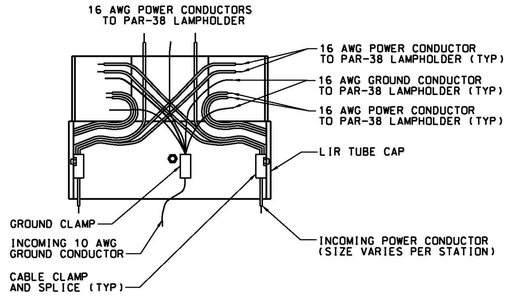

1 Q001 Q002 TUBE CAP WIRING - FRONT VIEW - MALS ONLY
NOT TO SCALE

NOTES:

1. STRIP INSULATION FROM THE 16 AWG GROUND CONDUCTOR AND FEED 16 AWG BARE COPPER THROUGH PAR-38 LIGHT BASE WEEP HOLE TO #6 SCREW. ATTACH THE 16 AWG BARE COPPER CONDUCTOR TO SCREW USING A CRIMP-ON CONNECTOR.
2. SUFFICIENT CABLE LENGTH SHALL BE COILED INSIDE LIR STRUCTURE TO ALLOW FOR RAISING AND LOWERING OF STRUCTURE WITHOUT STRAINING CABLES.
3. ANTI-SEIZE COMPOUND SHALL BE APPLIED TO ALL THREADED CONNECTIONS.

1' 0 1' 2' 5'
SCALE: 1/2" = 1'-0"

REV	APPROVED DATE	DESCRIPTION	JCN	REDLINE DATE	APVD
	05/20/2013	CONSTRUCTION, WR #12507 (DG)	992395	10/02/2012	

DEPARTMENT OF TRANSPORTATION
FEDERAL AVIATION ADMINISTRATION
ATO - TECHNICAL OPERATIONS EASTERN SERVICE AREA

MALSR
RUNWAY 19
EQUIPMENT INSTALLATION
STATION 5+70

RUTLAND RUTLAND - SOUTHERN VERMONT REGIONAL AIRPORT VT

REVIEWED BY	SUBMITTED BY	APPROVED BY
	DO NOT SIGN	DO NOT SIGN
	D.L. WEEKS	P. KIRBY
	PROJECT ENGINEER	MGR: CONSTRUCTION - CENTER C

DESIGNED	DLW	ISSUED BY	DATE	05/20/2013	JCN	992395
DRAWN	DG	ENGINEERING SERVICES NAVAIDS	DRAWING NO	RUT-NEZ120015-Q002		REV
CHECKED	DLW					

ISSUED FOR: CONSTRUCTION

PROJECT RECORD DRAWINGS
THIS DRAWING PRODUCED ON NEW ENGLAND REGION MICROSTATION SYSTEM

11/14/2013 10:10:13 AM Plotted by: Linda CTR Lojko

EDM: rut-nez120015-q002.dgn

CAUTION 1. MAINTAIN MSDS ON SITE AT ALL TIMES.

CAUTION 2. BOND STRENGTH IS SENSITIVE TO SURFACE PREPARATION TEMPERATURE & CURE TIME. INCREASE TEMP. CAN REDUCE CURE TIME. FOLLOW MANUFACTURERS RECOMMENDATIONS.

CAUTION 3. STABILIZER RODS @ 6 IN. I.D. (LIR) TUBES: HANDLE WITH CARE. CHEMLOCK 304 MANUFACTURED BY: HUGHSON CHEMICALS, LORD CORP., ERIE, PENN.
INFO

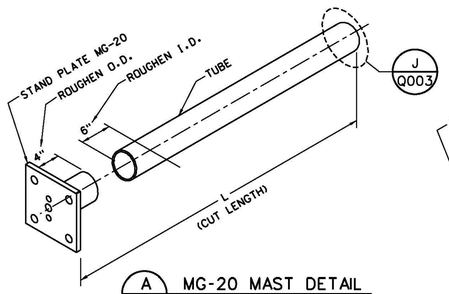

A Q003 MG-20 MAST DETAIL
NOT TO SCALE

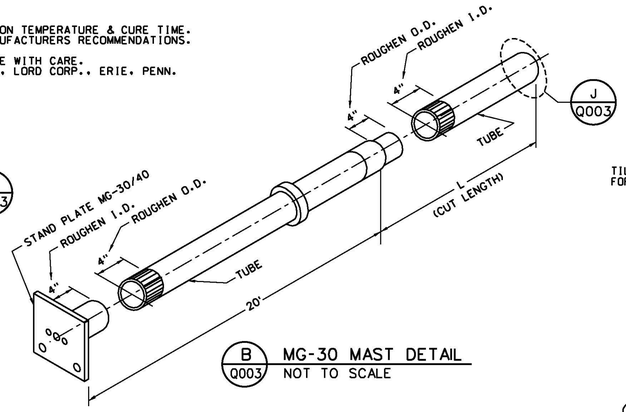

B Q003 MG-30 MAST DETAIL
NOT TO SCALE

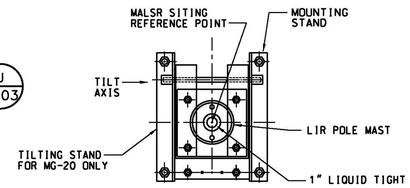

C Q003 MG-20 MOUNTING STAND PLAN
NOT TO SCALE

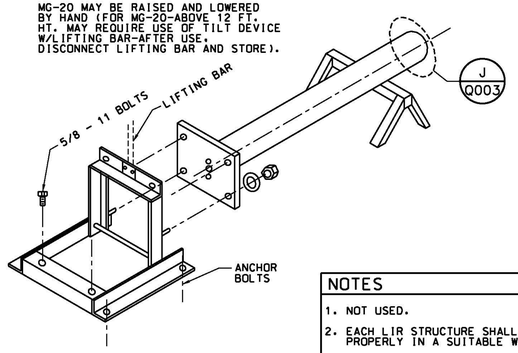

E Q001 MG-20 MAST ASSEMBLY
NOT TO SCALE

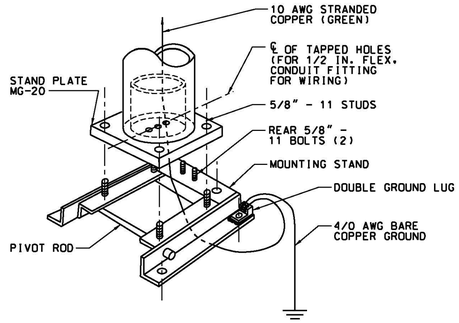

D Q001 MG-20 MOUNTING STAND ASSEMBLY
NOT TO SCALE

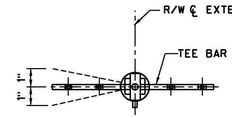

I Q003 INSTALLATION TOLERANCE PLAN
NOT TO SCALE

NOTES

1. NOT USED.
2. EACH LIR STRUCTURE SHALL BE CUT ACCURATELY, AND BONDED & CURED PROPERLY IN A SUITABLE WORK ROOM.
3. BASE OF EACH LIR STRUCTURE SHALL BE GROUNDED ELECTRICALLY IN THE FIELD.
4. EACH LIR STRUCTURE SHALL BE MAINTAINED PER MANUFACTURER'S INSTRUCTION BOOK.

ASSEMBLY INSTRUCTIONS

A1. FOR EACH LIR STRUCTURE MG-20 AND MG-30, DETERMINE REQUIRED TUBE LENGTH L TO ACHIEVE THE TOWER HEIGHTS AND LIGHT FIXTURE ELEVATIONS AS SHOWN ON DRAWING RUT-NEZ120015-Q001 AND Q002. FIELD VERIFY ELEVATION OF EACH FOUNDATION.

A2. CUTTING & BONDING INSTRUCTIONS: SEE DETAILS A & B. CUT TUBE LENGHTS FROM ITEM 2 USING A TABLE SAW WITH A DIAMOND OR CARBIDE ABRASIVE BLADE. ALL SAW CUTS SHALL BE AT RT. ANGLE TO TUBE AXIS. DEBURR SAW CUT EDGES WITH A FILE. FOR BONDING, ROUGHEN SURFACES TO BE BONDED. AS SHOWN IN DETAILS A & B USING EMERY CLOTH. CLEAN ROUGHENED SURFACES THOROUGHLY WITH A SOLVENT (TRICHLOROETHYLENE OR ACETONE). MIX EQUAL PARTS OF CHEMLOC 304-1 EPOXY RESIN & 304-2 HARDNER. STIR THOROUGHLY BUT AVOID AIR INCLUSION. FOR EACH JOINT TO BE BONDED, SPREAD A LIGHT COAT OF MIXED ADHESIVE ON BOTH THE SURFACES TO BE BONDED. FOR MG-20: SLOWLY SLIDE TUBE ONTO STAND PLATE WHILE ROTATING IT TO EXCLUDE AIR. CURE 48 HOURS AT ROOM TEMPERATURE ABOVE 65 DEG F.
FOR MG-30: BOND THE TWO TUBES TOGETHER FIRST, BY SLOWLY SLIDING ONE TUBE INTO THE OTHER WHILE ROTATING IT. CURE FOR 48 HOURS AT ROOM TEMP. ABOVE 65 DEG F. NEXT, BOND THE SPLICED TUBE TO THE STAND PLATE AS FOR MG-20, EXCEPT THE SPLICED TUBE IS SLOWLY SLID INTO THE STAND PLATE. FOR REFERENCE PURPOSE THE TUBES BONDED TO THE STAND PLATE ARE CALLED MASTS (E.G. MG-20 MAST, MG-30 MAST).

A3. ASSEMBLY INSTRUCTIONS:
IMPORTANT: ALL LIR STRUCTURES ARE TO BE ASSSEMBLED IN HORIZONTAL POSITION (SEE DETAILS E & G). ELECTRICAL WORK NOT SHOWN HERE. MG-20: USE MOUNTING STAND ASSEMBLY SHOWN IN DETAIL D. SET MOUNTING STAND ON ANCHOR BOLTS. SHIM TO LEVEL. FASTEN WITH (4) 3/4" NUTS. REMOVE (2) 5/8" BOLTS AT REAR OF MOUNTING STAND ASSEMBLY & PIVOT INNER SECTION UP TO VERTICAL POSITION. PLACE STAND PLATE (BOTTOM OF MAST) OVER (4) 5/8" STUDS IN MOUNTING STAND AND FASTEN WITH HEX NUTS. NOTE POSITION OF TAPPED HOLES IN STAND PLATE. FOR ATTACHING TEE-ASSEMBLY, REFER TO DETAIL H. MG-30: USE MOUNTING FRAME ASSEMBLY SHOWN IN DETAIL F. INSERT HINGE PINS WHICH ARE ATTACHED TO BASE CHANNEL, INTO LEFT & RIGHT ANCHOR PLATES. PLACE FRONT ANCHOR PLATE & LEFT & RIGHT ANCHOR PLATES OVER 3/4" ANCHOR BOLTS. CONNECT BASE TUBE TO BASE CHANNEL. MAKE SURE MOUNTING FRAME ASSEMBLY SWINGS FREELY ON HINGE PINS. SHIM TO LEVEL & TIGHTEN ANCHOR BOLTS WITH 3/4" NUTS. RAISE MOUNTING FRAME ARM TO ABSOLUTE VERTICAL. CHECK WITH LEVEL. ATTACH THE GUY ANCHOR SUPPORT ABOVE THE HOOP WOUND RING. ATTACH STABILIZER RODS TO 3 GUY ANCHOR ENDS. (DETAIL G). BOLT 2 GUIDE BRACKETS (DETAIL F) TO BOTTOM OF MAST STAND PLATE WITH 2 5/8" x 2 1/4" S.S. BOLTS & NUTS. DO NOT TIGHTEN. NOTE POSITION OF TAPPED HOLES IN STAND PLATE. SET STAND PLATE OVER ADJUSTING POST. POST GOES INTO HOLE IN CENTER OF STAND PLATE. ADJUST NUT FOR PROPER HEIGHT. SUPPORT UPPER END OF MAST SO IT IS APPROXIMATELY PARALLEL WITH GROUND. CLAMP GUIDE BRKTS. TO BASE TUBE AND TIGHTEN WITH 5/8" BOLTS. FASTEN TURNBUCKLES (ATTACHED TO STABILIZER RODS) TO GUY BRACKETS "X" & "Y". TIGHTEN TURNBUCKLE AT GUY BRACKET "X" UNTIL MAST IS EXACTLY PERPENDICULAR TO MOUNTING FRAME. TIGHTEN OTHER TWO TURNBUCKLES AT GUY BRKTS. "Y". ATTACH HORIZONTAL STABILIZER ASSEMBLY FOR ATTACHING TEE-ASSEMBLY REFER TO DETAIL H.

A4. RAISE EACH LIR STRUCTURE TO VERTICAL POSITION, AND VERIFY THAT EACH BASE AND MAST IS LEVEL AND PLUMB. WITH MG-30 LIR STRUCTURE BASE & MAST IN THE LEVEL & PLUMB POSITION, VERIFY THAT ALL THREE STABILIZER RODS (GUY RODS) ARE SNUG TIGHT. NEXT, ATTACH TEE-ASSEMBLY (REFER TO DETAIL H).

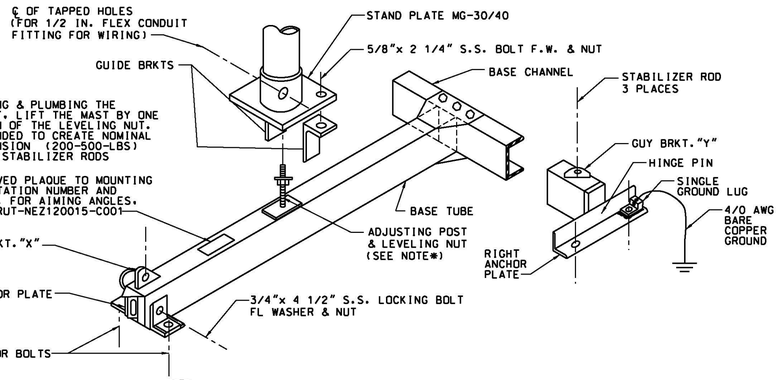

F Q002 MG-30 MOUNTING FRAME ASSEMBLY
NOT TO SCALE

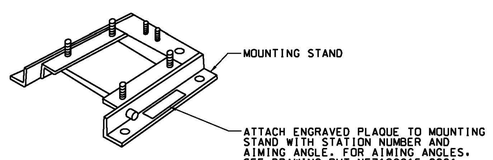

K Q003 STATION AND VERTICAL ANGLE IDENTIFICATION DETAIL
NOT TO SCALE

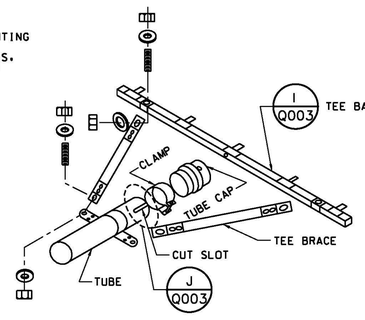

NOTE: FOR WIRING ACCESS TO TEE BAR CUT A SMALL HOLE IN THE RUBBER LINER (RL) OF TUBE CAP. DO NOT REMOVE R.L.

H Q001 Q002 TEE BAR ASSEMBLY
NOT TO SCALE

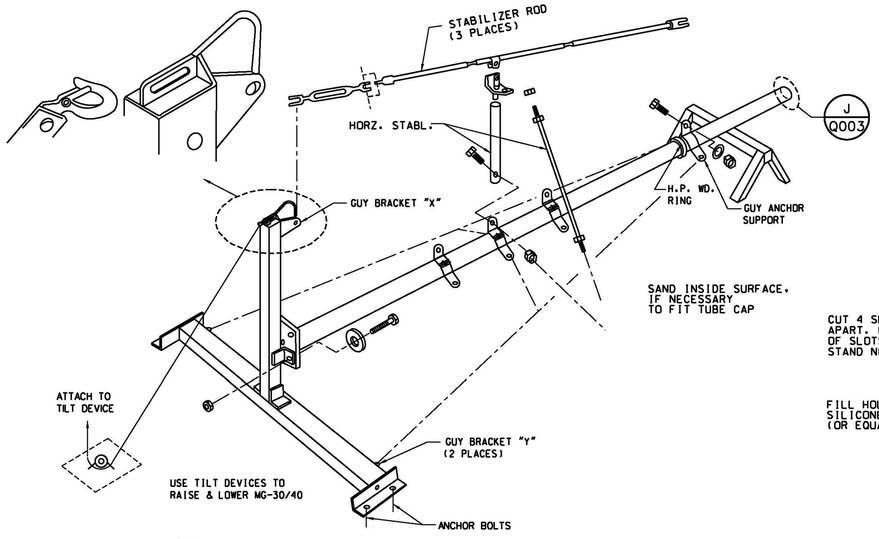

G Q002 MG-30 MAST ASSEMBLY
NOT TO SCALE

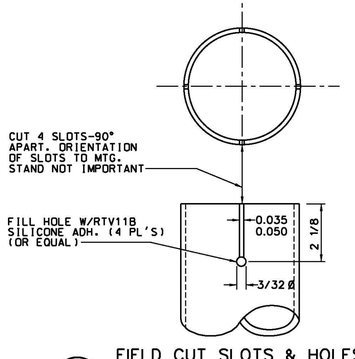

J Q003 FIELD CUT SLOTS & HOLES (FOR INSTALLING TUBE CAP)
NOT TO SCALE

	05/20/2013	CONSTRUCTION, WR #12507 (DG)	992395	10/02/2012
REV	APPROVED DATE	DESCRIPTION	JCN	REDLINE DATE / APVD

DEPARTMENT OF TRANSPORTATION
FEDERAL AVIATION ADMINISTRATION
ATO - TECHNICAL OPERATIONS — EASTERN SERVICE AREA

MALSR
RUNWAY 19
LOW IMPACT RESISTANT (LIR) STRUCTURES ASSEMBLY AND MOUNTING DETAILS

RUTLAND — RUTLAND - SOUTHERN VERMONT REGIONAL AIRPORT — VT

REVIEWED BY	SUBMITTED BY: D.L. WOLFF (DO NOT SIGN)	APPROVED BY: P. KIRBY (DO NOT SIGN)	
	PROJECT ENGINEER	MGR: CONSTRUCTION - CENTER C	
DESIGNED DLW	ISSUED BY: ENGINEERING SERVICES NAVAIDS	DATE 05/20/2013	JCN 992395
DRAWN DG		DRAWING NO	REV
CHECKED DLW		RUT-NEZ120015-Q003	

Record Drawings
Work completed in general conformance with contract plans.

ISSUED FOR CONSTRUCTION

11/14/2013 10:10:16 AM Plotted by:Linda CTR Lojko

EDM: rut-nez120015-q003.dgn

PROJECT RECORD DRAWINGS
THIS DRAWING PRODUCED ON NEW ENGLAND REGION MICROSTATION SYSTEM

Record Drawings
Work completed in general conformance with contract plans.

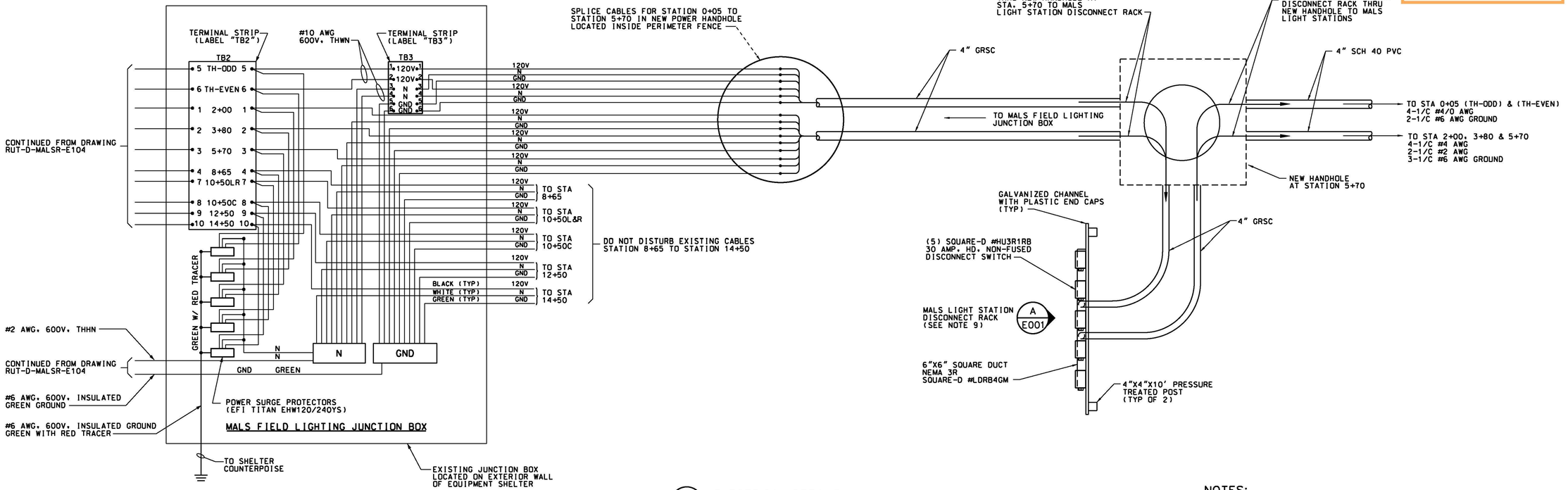

1 / E001 ELECTRICAL DETAILS
NOT TO SCALE

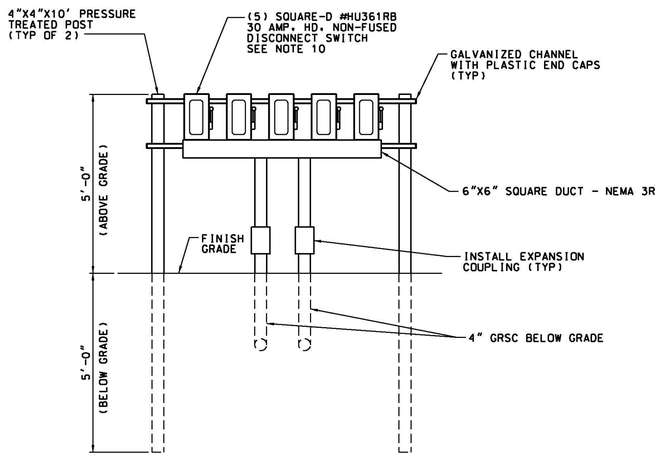

A / E001 DISCONNECT SWITCH RACK ELEVATION
SCALE: 1/2"=1'-0"

NOTES:

1. ALL WIRING SHALL MEET THE LATEST EDITION OF NFPA 70, THE NATIONAL ELECTRIC CODE (NEC), AND FAA STD-019E, LIGHTNING AND SURGE PROTECTION, GROUNDING, BONDING AND SHIELDING REQUIREMENTS FOR FACILITIES AND ELECTRONIC EQUIPMENT.
2. POWER AND GROUND WIRES SHALL BE SINGLE CONDUCTOR UNLESS OTHERWISE SPECIFIED.
3. EACH CIRCUIT SHALL MAINTAIN AN INDIVIDUAL NEUTRAL AND GROUND CONDUCTOR EXCEPT WHERE INDICATED OTHERWISE.
4. WHERE POSSIBLE, POWER CABLES AND CONTROL/DATA CABLES SHALL RUN IN INDEPENDENT CONDUIT. SEPARATE POWER AND CONTROL/DATA CABLES IN COMMON ENCLOSURES.
5. ALL UNUSED CONDUCTORS SHALL BE GROUNDED AT BOTH ENDS.
6. FORK VINYL INSULATED CRIMP-ON LUGS SHALL BE USED FOR WIRE TERMINATIONS UNLESS OTHERWISE DIRECTED.
7. TERMINAL STRIPS SHALL BE PROPERLY SIZED FOR REQUIRED CONDUCTORS.
8. ALL WIRES SHALL BE COLOR CODED AS INDICATED OR AS DIRECTED: LINE 1: BLACK; LINE 2: RED; NEUTRAL: WHITE; NEC GROUND: GREEN ELECTRONIC (MULTI-POINT) GROUND: GREEN W/ ORANGE TRACER SURGE PROTECTION GROUND: GREEN W/ RED TRACER.
9. INSTALL LIGHT STATION DISCONNECT RACK PARALLEL WITH RUNWAY END AT A MINIMUM OF 602 FEET FROM RUNWAY END.
10. LABEL EACH DISCONNECT SWITCH (TH-ODD, TH-EVEN, STA 2+00, STA 3+80, STA 5+70).

REV	APPROVED DATE	DESCRIPTION	JCN	REDLINE DATE	APVD
	05/20/2013	CONSTRUCTION, WR #12507 (DG)	992395	10/02/2012	

DEPARTMENT OF TRANSPORTATION
FEDERAL AVIATION ADMINISTRATION
ATO - TECHNICAL OPERATIONS — EASTERN SERVICE AREA

MALSR
RUNWAY 19
ELECTRICAL DETAILS

RUTLAND — RUTLAND - SOUTHERN VERMONT REGIONAL AIRPORT — VT

REVIEWED BY	SUBMITTED	APPROVED BY
	R.MACCINI	P.KIRBY
	PROJECT ENGINEER	MGR: CONSTRUCTION - CENTER C

DESIGNED PM
DRAWN DG
CHECKED PM

ISSUED BY: ENGINEERING SERVICES NAVAIDS

DATE 05/20/2013 — JCN 992395
DRAWING NO RUT-NEZ120015-E001 — REV

ISSUED FOR: CONSTRUCTION

EDM: rut-nez120015-e001.dgn

11/14/2013 10:09:53 AM Plotted by: Linda CTR Lojko

PROJECT RECORD DRAWINGS
THIS DRAWING PRODUCED ON NEW ENGLAND REGION MICROSTATION SYSTEM

Record Drawings
Work completed in general conformance with contract plans.

CENTERLINE RUNWAY 1-19

153+00

PK NAIL AT STA. 0+00
RUNWAY 19 THRESHOLD
EL: 774.0 AT CENTERLINE
(RUT STA 153+05)

NETT #59

NETT #60

ROAD AIRPORT

EXPOSE THE DEB VASI POWER CABLES AND REROUTE, THROUGH 2" PVC SLEEVE, INTO NEW CONCRETE HANDHOLE AND SPLICE

1 C002 INSTALL CONCRETE HANDHOLE

EXISTING DEB VASI POWER 3-1/C #4, 600V

RUNWAY SAFETY AREA

RSA — RSA — RSA

POLE #61

EXISTING CONCRETE DUCT MARKER

INSTALL TWO 2" SCH 40 PVC CONDUITS ONE CONDUIT WITH NEW VASI POWER 3-1/C 4 AWG, 600V, THWN, AND ONE SPARE CONDUIT WITH PULL STRING

2 C002 INSTALL CONCRETE DUCT MARKER AT MIDPOINT

A C002 TRENCH DETAIL

O.H. WIRES

Record Drawings
See attached C-1 - Electrical Sign Conduit revision - Change Order 3

1 C002 INSTALL CONCRETE HANDHOLE

BRUSH

BRUSH

POLE #62

INSTALL METER PEDESTAL PER UTILITY COMPANY REQUIREMENTS SEE DRAWING RUT-NEZ120016-C003 SEE NOTES 2, 3 AND 4

POLE #625

INSTALL CONDUIT AND CABLE PER UTILITY COMPANY REQUIREMENTS SEE DRAWING RUT-NEZ120016-C003

PERIMETER FENCE

NETT #63

NETT #63S

6+00

5+00

4+00

INSTALL RISER AND WEATHERHEAD PER UTILITY COMPANY REQUIREMENTS SEE DRAWING RUT-NEZ120016-C003

POLE #201

EXISTING 4" 2-WAY PVC DUCT BANK 60' LONG INSTALLED UNDER PHASE 1

PROPERTY LINE (TYP)

3+00

EXISTING POWER POLE

O.H. WIRES

NETT #64

7+00

NETT #64S

POLE #202

POLE 64.5

1 C001 PLAN - VASI SERVICE ENTRANCE
SCALE: 1"=30'-0"

30' 0 30' 60'
SCALE: 1" = 30'

NOTES:

1. THE CONTRACTOR SHALL REMOVE AND DISPOSE OF THE EXISTING VASI SERVICE ENTRANCE. EXISTING DEB VASI POWER CABLES MAY BE ABANDONED IN PLACE. THE EXISTING ACCOUNT NUMBER IS 200163863 AND SHALL BE RETAINED.
2. THE WORK REQUEST NUMBER WITH GREEN MOUNTAIN POWER IS 243343 FOR THE NEW SERVICE ENTRANCE WORK AND HAS BEEN ASSIGNED TO ERIC MCLELLAN. GREEN MOUNTAIN POWER'S TELEPHONE NUMBER IS 888-835-4672. THE WORK REQUEST NUMBER WAS PROVIDED BY CYNTHIA (802-747-5722).
3. INSTALL METER PEDESTAL INSIDE PERIMETER FENCE. METER SHALL FACE THE FENCE AND AIRPORT ROAD. PROVIDE NECESSARY CLEARANCE FROM THE FENCE PER NEC. COORDINATE WORK WITH THE UTILITY COMPANY.
4. THE CONTRACTOR SHALL INSTALL A FUSED, NEMA 3R, DISCONNECT SWITCH ON THE LOAD SIDE OF THE ELECTRIC METER.

REV	APPROVED DATE	DESCRIPTION	JCN	REDLINE DATE	APVD
	05/20/2013	CONSTRUCTION, WR #12738 (RUT)	992395	01/31/2013	

DEPARTMENT OF TRANSPORTATION
FEDERAL AVIATION ADMINISTRATION
ATO - TECHNICAL OPERATIONS — EASTERN SERVICE AREA

VASI
RUNWAY 19
SERVICE ENTRANCE REPLACEMENT

RUTLAND — RUTLAND - SOUTHERN VERMONT REGIONAL AIRPORT — VT

REVIEWED BY	SUBMITTED BY	APPROVED BY
	D.L. WYER DO NOT SIGN	P. KIRBY DO NOT SIGN
	PROJECT ENGINEER	MGR: ENGINEERING - CENTER C
	DESIGNED DLW	ISSUED BY: ENGINEERING SERVICES NAVAIDS
	DRAWN RUT	DATE 05/20/2013 JCN 992395
	CHECKED DLW	DRAWING NO RUT-NEZ120016-C001 REV

ISSUED FOR: CONSTRUCTION

PROJECT RECORD DRAWINGS
THIS DRAWING PRODUCED ON NEW ENGLAND REGION MICROSTATION SYSTEM

11/14/2013 3:02:58 PM Plotted by: Scott CTR Pettengill

EDM: rut-nez120016-c001.dgn

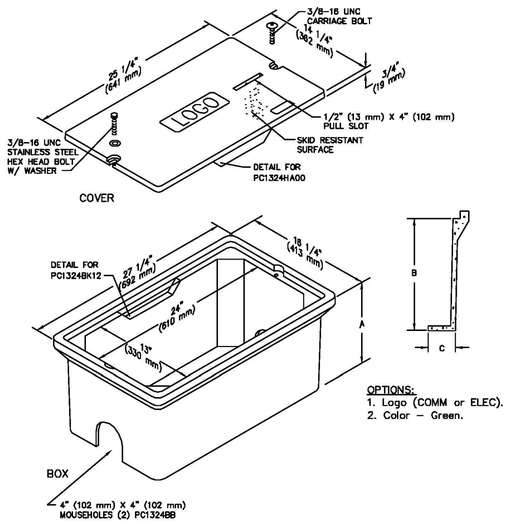

OPTIONS:
1. Logo (COMM or ELEC).
2. Color – Green.

COVERS (W/ LOGO SEE OPTION 1 ABOVE.)

DESCRIPTION	PART NO.	WEIGHT
W/ 2 Bolts	PC1324CA00	23# (10.4 kg)
W/ No Bolts	PC1324WA00	23# (10.4 kg)
* Heavy Duty W/ 2 Bolts	PC1324HA00	30# (13.6 kg)

BOXES (Stackable)

DESCRIPTION	PART NO.	WEIGHT	DIMENSIONS A	B	C
W/ No Base	PC1324BA12	52# (23.6 kg)	12" (305 mm)	11 1/4" (286 mm)	N/A
* W/ No Base	PC1324BK12	47# (21.3 kg)	12" (305 mm)	11 1/4" (286 mm)	N/A
W/ No Base, (2) Mouseholes	PC1324BB12	49# (22.2 kg)	12" (305 mm)	11 1/4" (286 mm)	N/A
W/ Base	PC1324DA12	64# (29.0 kg)	12 1/2" (318 mm)	11 3/4" (298 mm)	N/A
Footed Box	PC1324JA12	59# (26.8 kg)	12 1/2" (318 mm)	11 3/4" (298 mm)	2 7/8" (73 mm)

TYPICAL HAND HOLE (PHH/CHH) DETAIL
NOTE TO SCALE

NOTE:

1. 13"W X 24"L (INSIDE DIMENSIONS MINIMUM) W/ OPEN BOTTOM "PC" STYLE QUAZITE HANDHOLE ASSEMBLY OR APPROVED EQUAL. REFER TO PLANS FOR QUANTITIES OF HANDHOLES DENOTED W/ CHH (COMM) OR PHH (POWER).

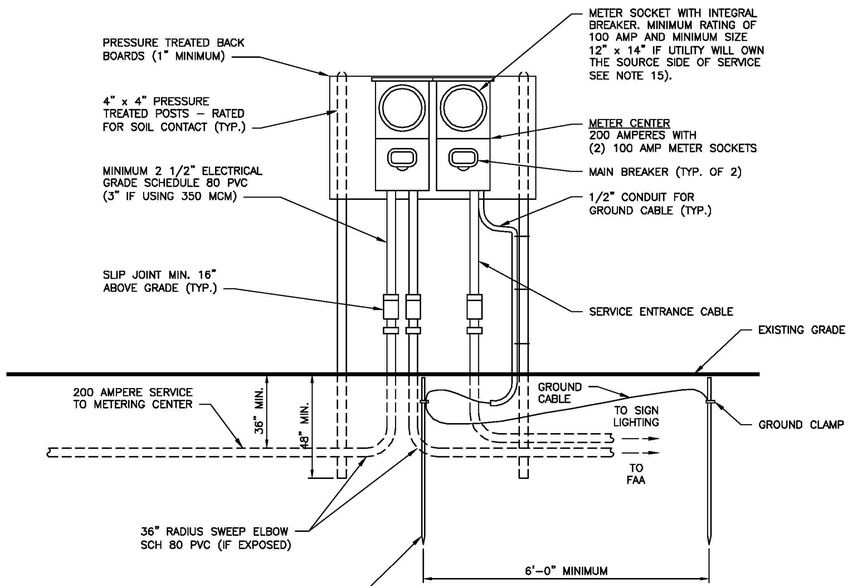

TYPICAL METER PEDESTAL DETAIL
NOTE TO SCALE

NOTES:

1. FOR REFERENCED NOTES IN ABOVE DETAIL, REFER TO TYPICAL METER PEDESTAL NOTES ON DRAWING TITLED "VASI – RUNWAY 19 – MISCELLANEOUS DETAILS – SHEET 2 OF 2" DATED 5/20/2013.
2. ONE METER FOR FAA, THE OTHER METER FOR AIRPORT SIGN CIRCUIT.

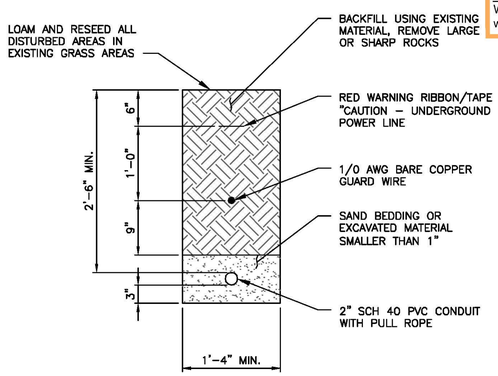

TYPICAL TRENCH DETAIL
NOTE TO SCALE

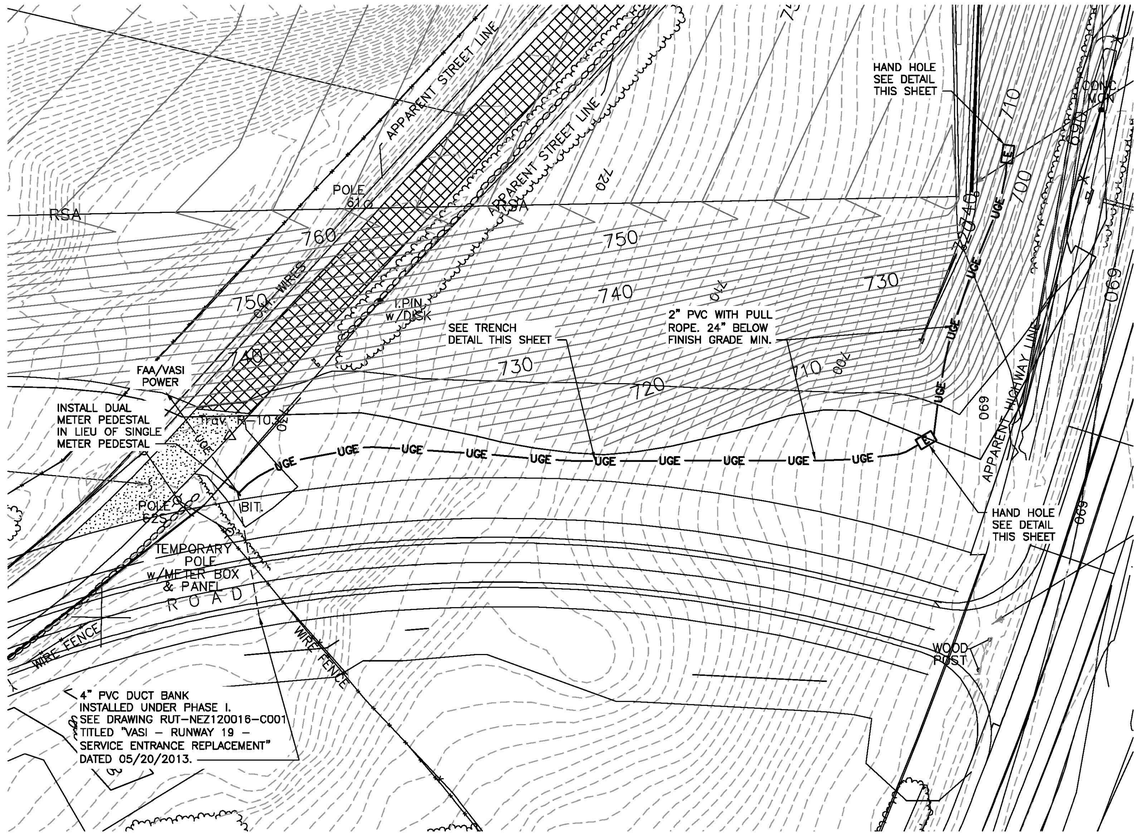

GRAPHIC SCALE
40 0 20 40 80 160
(IN FEET)
1 inch = 40 ft. AT 22X34
HALF SIZE AT 11X17

Record Drawings
Work completed in general conformance with change order 3 contract plan.

DuBois & King inc.
ENGINEERING • PLANNING • MANAGEMENT • DEVELOPMENT
6 GREEN TREE DRIVE
SO. BURLINGTON, VT 05403
TEL: (802) 878-7661
FAX: (866) 783-7101
www.dubois-king.com
RANDOLPH, VT
SPRINGFIELD, VT
BEDFORD, NH
LACONIA, NH
© Copyright 2014 Dubois & King Inc

PROFESSIONAL SEAL

NO.	DATE	DESCRIPTION	BY	CK'D

CLARENDON, VERMONT

RUTLAND SOUTHEAST VERMONT REGIONAL AIRPORT

SHEET TITLE
AIRPORT SIGN & ELECTRIC CONDUIT PLAN AND DETAILS

DRAWN BY	DATE
TJD	SEPT. 201
CHECKED BY	D&K PROJECT #
LDC	322274F
PROJ. ENG.	D&K ARCHIVE #
LDC	

SHEET NUMBER
C-1

PROJECT RECORD DRAWINGS

Record Drawings
Work completed in general conformance with contract plans.

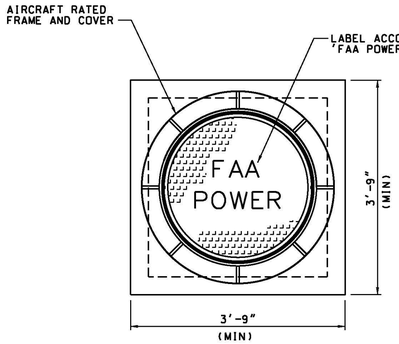

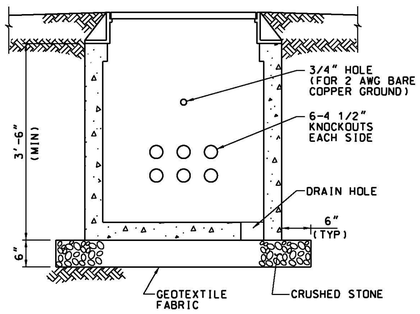

HANDHOLE NOTES:

1. CONCRETE COMPRESSIVE STRENGTH - 5,000 PSI MINIMUM.
2. STEEL REINFORCEMENT - ASTM A615, GRADE 60, 1" MINIMUM COVER.
3. MINIMUM DESIGN LOAD - 70,000 LBS DUAL WHEEL LOADING OR AASHTO HS20-44 AT A MINIMUM.
4. CAST GRAY IRON HANDHOLE FRAME AND COVER SHALL BE NEENAH AIRPORT CASTING R-3492 SERIES OR APPROVED EQUAL.
5. CAST IRON FRAME SHALL BE MECHANICALLY FASTENED TO THE HANDHOLE.
6. A PULLEYE SHALL BE PROVIDED ON EACH WALL.
7. INSTALL A CRUSHED STONE SUMP UNDER ALL HANDHOLES. TOP, SIDES AND BOTTOM OF SUMP SHALL BE LINED WITH A WATER PERMEABLE GEOTEXTILE FABRIC.
8. AFTER INSTALLATION OF CONDUITS THROUGH KNOCKOUTS, GROUT AROUND CONDUIT.
9. CABLE SLACK LOOPS SHALL BE LABELED AND RACKED IN ALL HANDHOLES.
10. INSTALL ONE 3/4", 10 FOOT LONG GROUND ROD AT EACH HANDHOLE OR SET OF ADJACENT HANDHOLES. BOND THIS GROUND ROD TO EITHER THE GRSC OR THE 1/0 AWG BARE COPPER GUARD WIRE OVER ANY PVC CONDUIT.
11. HANDHOLE MAY BE LOCATED INSIDE OF THE RUNWAY SAFETY AREA (RSA).

1 / C001 TYPICAL HANDHOLE DETAIL
NOT TO SCALE

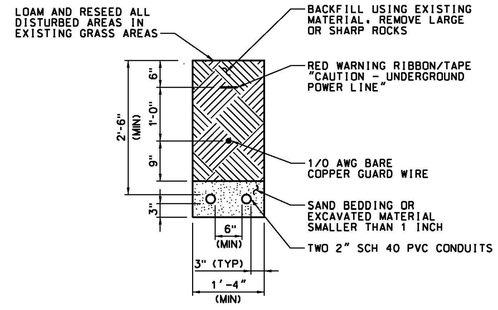

A / C001 TRENCH DETAIL
SCALE: 3/4" = 1'-0"

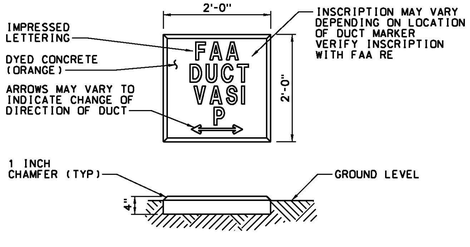

2 / C002 CONCRETE DUCT MARKER
SCALE: 3/4" = 1'-0"

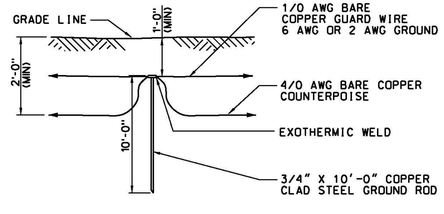

3 / C002 TYPICAL GROUND ROD INSTALLATION
NOT TO SCALE (SEE NOTE 2)

1' 0 1' 2' 3'
SCALE: 3/4" = 1'-0"

NOTES:

1. PROVIDE SIX INCH (MINIMUM) CLEAR DISTANCE BETWEEN POWER AND CONTROL OR SIGNAL CONDUITS. PROVIDE SIX INCH (MINIMUM) CLEAR DISTANCE BETWEEN POWER AND HIGH VOLTAGE CONDUITS. PROVIDE SIX INCH (MINIMUM) CLEAR DISTANCE BETWEEN HIGH VOLTAGE AND CONTROL OR SIGNAL CONDUITS.
2. FOR INSTALLATION OF GUARD WIRE AND GROUND ROD SPACING, SEE DRAWING RUT-NEZ120015-G003, NOTE 10 UNDER ELECTRICAL GROUNDING.

REV	APPROVED DATE	DESCRIPTION	JCN	REDLINE DATE	APVD
	05/20/2013	CONSTRUCTION, WR #12738 (RUT)	992395	01/31/2013	

DEPARTMENT OF TRANSPORTATION
FEDERAL AVIATION ADMINISTRATION
ATO - TECHNICAL OPERATIONS EASTERN SERVICE AREA

VASI
RUNWAY 19
MISCELLANEOUS DETAILS
SHEET 1 OF 2

RUTLAND RUTLAND - SOUTHERN VERMONT REGIONAL AIRPORT VT

REVIEWED BY	SUBMITTED BY	APPROVED BY
	DO NOT SIGN D.L. WEBER	DO NOT SIGN P. KIRBY
	PROJECT ENGINEER	MGR: ENGINEERING - CENTER C

DESIGNED DLW	ISSUED BY	DATE 05/20/2013	JCN 992395
DRAWN RUT	ENGINEERING SERVICES NAVAIDS	DRAWING NO RUT-NEZ120016-C002	REV
CHECKED DLW			

ISSUED FOR: CONSTRUCTION

PROJECT RECORD DRAWINGS
THIS DRAWING PRODUCED ON NEW ENGLAND REGION MICROSTATION SYSTEM

11/14/2013 3:03:12 PM Plotted by: Scott CTR Pettengill
EDM: rut-nez120016-c002.dgn

UNDERGROUND SERVICE

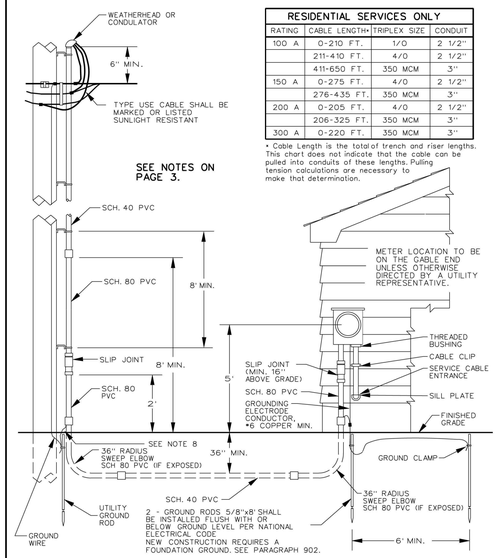

RESIDENTIAL SERVICES ONLY			
RATING	CABLE LENGTH*	TRIPLEX SIZE	CONDUIT
100 A	0-210 FT.	1/0	2 1/2"
	211-410 FT.	4/0	2 1/2"
	411-650 FT.	350 MCM	3"
150 A	0-275 FT.	4/0	2 1/2"
	276-435 FT.	350 MCM	3"
200 A	0-205 FT.	4/0	2 1/2"
	206-325 FT.	350 MCM	3"
300 A	0-220 FT.	350 MCM	3"

* Cable Length is the total of trench and riser lengths. This chart does not indicate that the cable can be pulled into conduits of these lengths. Pulling tension calculations are necessary to make that determination.

VERMONT UTILITIES ELECTRIC SERVICE REQUIREMENTS	DRAWN: LAW	DATE: 01-08-09	
	APPRVD: YES	DATE: 01-08-09	
	DRAWING No.: 201	PAGE: 1of3	
	DATA BASE No.: DTW01891g		

DRAWINGS/STANDARD/VERMONT

UNDERGROUND SERVICE

Notes:
1. All wiring and materials shall conform to the requirements of the National Electric Code (NEC) and to any applicable local codes. Where conflict exists the more stringent code will apply. For customer owned equipment, any requirements in excess of code specified minimums, are recommended not required.
2. This specification covers residential services. Commercial service equipment is under the jurisdiction of the electrical inspector. The cable sizes shown in the chart may not apply to commercial services.
3. The location of the conduit risers and the meter socket will be designated by the utility representative. Any relocation shall be approved by a utility representative.
4. Conduit Condulators may be required for multi-conductor services and for conductors of 350 MCM or larger. Exercise care in limiting water entry.
5. Locate the riser conduit on the quarter of the pole away from normal traffic.
6. Residential 320 amp meter sockets, and all commercial meter sockets, shall have a manual bypass. For Utility-specific details see Paragraph 705E. See Paragraph 707 for requirements and Utility-specific details of how a Service Grounding Connection is to be made. See the Meter Socket Specification (Dwg 601) included in this manual.
7. The grounding electrode conductor, to a driven ground, shall be a minimum of #6 copper. The conductor shall be adequately protected. The driven grounds shown shall be a minimum of 5/8" in diameter and 8' long. See Paragraph 901 through 905 for details of the Service Ground.
8. Any steel conduit within 18" of the surface shall be bonded. Steel conduit is not required.
9. Any construction, at the pole, above ground level, shall be done by the utility company. Exception: The customer may install that portion of their equipment that can be reached while standing on the ground. Any trench near the base of the pole shall be immediately backfilled and properly tamped.
10. Depths shallower than 36" may be allowed where obstructions such as ledge are encountered. Any portion of conduit shallower than 24" shall be covered by a minimum 2" concrete cap. See the Utility for additional requirements for conduit buried near underground facilities, under driveways or roadways, or, for depths shallower than 12".
11. All gas valves shall be a minimum of 10 ft from electric meter equipment. For clearances less than 10 ft see Dwg. 401 and NFPA 58.
12. The Service Disconnecting Means shall be installed at a readily accessible location, either outside of a building or structure, or, inside a building or structure nearest the point of entrance of the service conductors, not to exceed 10 feet conductor length, from the point of entrance.
13. The chart shows the acceptable total cable length for given service amp ratings and conductors. The chart is based on a maximum 3% voltage drop in an aluminum underground service cable for a 120/240 volt service. For other voltages, cables or multiple cables consult your local utility.
14. A marker tape shall be installed, above the conduit, 12 inches below grade. Type USE cable shall be marked or listed sunlight resistant.
15. A side bus bar meter socket is required if 350MCM cable is used.
16. URD Service Risers, from a pole-mounted three-phase transformer bank, shall be limited to an 800 amp rating. Larger services shall be supplied by a padmounted transformer.
17. Customer must provide sufficient cable to reach the transformer or secondary cable and to make connections.

VERMONT UTILITIES ELECTRIC SERVICE REQUIREMENTS	App'd: yes	DRAWING NUMBER 201 Page 3	
	DATE: 02/10		
	201pg3b.doc		

TYPICAL TRENCH CROSS-SECTION U.G. CABLE IN CONDUIT

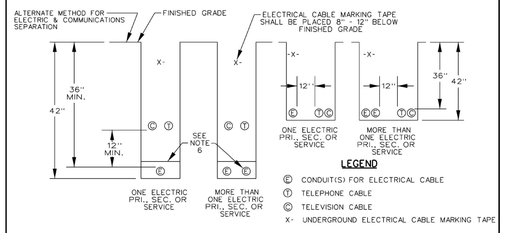

NOTES:

1. ALL TRENCHES AND ELECTRICAL CONDUIT(S) REQUIRE APPROVAL BY UTILITY INSPECTOR BEFORE BACKFILLING.
2. ALL TRENCHES SHALL BE 18 INCH MINIMUM WIDTH. THE CONDUIT SHALL BE EMBEDDED IN UNFROZEN SAND OR FINE GRAVEL, THAT WILL PASS A 1 INCH MESH. THIS MATERIAL SHALL BE A MINIMUM OF 4 INCHES THICK ON ALL SIDES OF THE CONDUIT. THE REMAINDER OF THE BACKFILL SHALL BE CLEAN, AND, SHALL NOT CONTAIN ROCKS LARGER THAN 8 INCHES IN ANY DIMENSION. CAREFULLY COMPACT THE FULL DEPTH OF BACKFILL, UNDER TRAVELLED WAYS AND PARKING LOTS. THE MINIMUM DEPTH, UNDER A HIGHWAY, SHALL BE 48 INCHES RATHER THAN 36 INCHES. MOUNDING THE TRENCH, TO PROVIDE THE REQUIRED DEPTH, IS NOT ALLOWED.
3. CONDUIT SHALL BE ENCASED IN A 4 INCH ENVELOPE OF CONCRETE UNDER THE FOLLOWING CONDITIONS:
   A) BROOK CROSSINGS.
   B) CROSSINGS OF WATER, SEWER, AND GAS PIPELINES. CROSSINGS SHALL BE DONE AT NINETY DEGREES IF POSSIBLE. NORMALLY, THE ELECTRICAL CONDUIT SHALL BE A MINIMUM OF 18 INCHES ABOVE THE PIPE, CAREFULLY COMPACT THE FILL BELOW THE ELECTRICAL CONDUIT. CONCRETE ENCASEMENT IS REQUIRED FOR 10 FEET ON EACH SIDE OF THE PIPE.
   C) UNDER THE TRAVELLED WAY OF CITY STREETS, AND, UNDER TOWN HIGHWAYS, IF REQUIRED BY THE TOWN. A PIPE SLEEVE, SURROUNDING THE CONDUIT, MAY BE SUBSTITUTED.
   D) CONDUITS WITHIN 20 FEET OF TANKS CONTAINING FUELS, OR SOLVENTS. THESE TANKS MAY BE ABOVE OR BELOW GRADE. THIS REQUIREMENT DOES NOT APPLY TO URD SERVICES.
4. TRENCHES SHOULD BE LOCATED 10 FEET FROM ANY STRUCTURE, UNLESS THE CONDUIT IS GOING TO THE STRUCTURE. CONTACT THE UTILITY IF CLOSER APPROACHES ARE NECESSARY.
5. TRENCHES SHOULD BE LOCATED 10 FEET FROM ANY WATER, SEWER, OR GAS PIPELINE THAT PARALLELS THE CONDUIT. CONTACT THE UTILITY IF CLOSER APPROACHES ARE NECESSARY.
6. COMMUNICATIONS CABLES AND CONDUITS MAY BE LOCATED IN THE SAME TRENCH WITH ELECTRIC CABLES OR CONDUITS. A MINIMUM HORIZONTAL OR VERTICAL SEPARATION OF 12 INCHES IS REQUIRED. ELECTRICAL CONDUITS SHALL BE SEPARATED BY 4 INCHES. THESE DISTANCES ARE MEASURED SURFACE-TO-SURFACE, NOT CENTER-TO-CENTER.
7. DEPTHS SHALLOWER THAN 36 INCHES MAY BE ALLOWED WHERE OBSTRUCTIONS SUCH AS LEDGE ARE ENCOUNTERED. ANY PORTION OF THE CONDUIT SHALLOWER THAN 24 INCHES SHALL BE COVERED WITH A MINIMUM 2 INCH CONCRETE CAP. SEE THE UTILITY FOR DEPTHS SHALLOWER THAN 12 INCHES.
8. CHECK WITH THE LOCAL UTILITY FOR SPECIFIC REQUIREMENTS.

VERMONT UTILITIES ELECTRIC SERVICE REQUIREMENTS	DRAWN: LAW	DATE: 11-11-12	
	APPRVD: YES	DATE: 11-11-12	
	DRAWING No.: 203	PAGE: 1	
	DATA BASE No.: DTW01893a		

DRAWINGS/STANDARD/VERMONT

Record Drawings
Work completed in general conformance with contract plans.

TYPICAL METER PEDESTAL

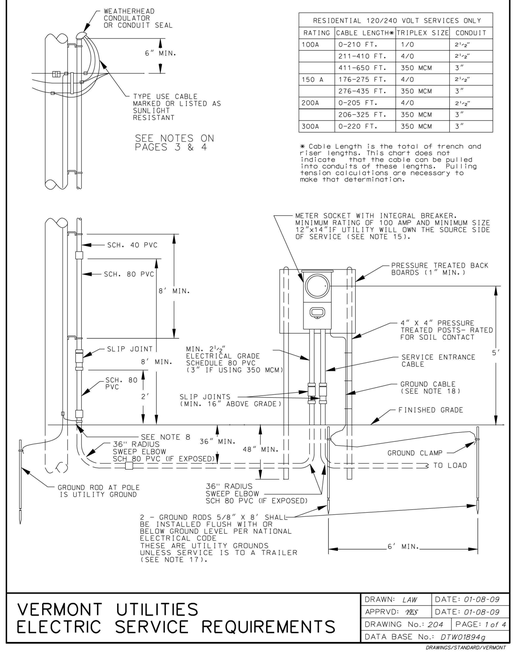

RESIDENTIAL 120/240 VOLT SERVICES ONLY			
RATING	CABLE LENGTH*	TRIPLEX SIZE	CONDUIT
100A	0-210 FT.	1/0	2½"
	211-410 FT.	4/0	2½"
	411-650 FT.	350 MCM	3"
150 A	0-275 FT.	4/0	2½"
	276-435 FT.	350 MCM	3"
200A	0-205 FT.	4/0	2½"
	206-325 FT.	350 MCM	3"
300A	0-220 FT.	350 MCM	3"

* Cable Length is the total of trench and riser lengths. This chart does not indicate that the cable can be pulled into conduits of these lengths. Pulling tension calculations are necessary to make that determination.

VERMONT UTILITIES ELECTRIC SERVICE REQUIREMENTS	DRAWN: LAW	DATE: 01-08-09	
	APPRVD: YES	DATE: 01-08-09	
	DRAWING No.: 204	PAGE: 1 of 4	
	DATA BASE No.: DTW01894g		

DRAWINGS/STANDARD/VERMONT

TYPICAL METER PEDESTAL

Notes:
1. All wiring and materials shall conform to the requirements of the National Electric Code (NEC) and to any applicable local codes. Where conflict exists the more stringent code will apply. For customer owned equipment, any requirements in excess of code specified minimums, are recommended not required.
2. This specification covers residential services. Commercial service equipment is under the jurisdiction of the electrical inspector. The cable sizes shown in the chart may not apply to commercial services.
3. The location of the meter pedestal and conduit risers and the meter socket will be designated by the utility representative. There shall be no more than three ninety-degree bends in the conduit, including one at the pole/pad and another at the meter pedestal. Any relocation shall be approved by a utility representative.
4. Locate the riser conduit on the quarter of the pole away from normal traffic.
5. The pedestal shall be a minimum of 10 feet from the pole or padmount transformer, and, 5 feet from the mobile home.
6. All gas valves shall be a minimum of 10 ft from electric meter equipment. For clearances less than 10 ft, see Drawing No. 401 in this manual or refer to NFPA 58.
7. The customer shall supply and install the pedestal, conduit, meter socket/disconnect and grounding. A pull rope having a minimum pull strength of 500 lbs. is required to be installed in the conduit by the customer if the Utility supplies the cable. If the customer supplies the cable, it shall be installed in the conduit, and connected to the meter socket.
8. The trench should be dug a minimum of 18 inches wide and 36 inches deep to the top of the conduit.
9. Depths shallower than 36" may be allowed where obstructions such as ledge are encountered. Any portion of conduit shallower than 24" shall be covered by a minimum 2" concrete cap. See the Utility for additional requirements for conduit buried near underground facilities, under driveways or roadways, or, for depths shallower than 12".
10. A marker tape shall be installed, above the conduit, 12 inches below grade. Type USE cable shall be listed or marked sunlight resistant.
11. Any steel conduit within 18" of the surface shall be bonded. Steel conduit is not required.
12. Any construction, at the pole, above ground level, shall be done by the utility company. Exception: The customer may install that portion of their equipment that can be reached while standing on the ground. Any trench near the base of the pole shall be immediately backfilled and properly tamped.
13. The chart shows the acceptable total cable length for given service amp ratings and conductors. The chart is based on a maximum 3% voltage drop in an aluminum underground service cable for a 120/240 volt service. For other voltages, cables or multiple cables consult your local Utility.
14. Residential 320 amp meter sockets, and all commercial meter sockets, shall have a manual bypass. For Utility-specific details see Paragraph 705E. The meter socket shall have a separate grounding electrode conductor connector. The connector shall be appropriately connected to the service neutral bus. The service neutral, and not the grounding electrode conductor, shall extend from the meter socket to the main disconnect in the building. An exception would occur if a breaker, under the meter socket, is the main disconnect for a mobile home. See the Meter Socket Specification (Dwg. 401) included in this manual.
15. A side bus bar meter socket and 3 inch conduit are required if 350 MCM cable or a double run of cable is used.
16. The Service Disconnecting Means shall be installed at a readily accessible location, either outside of a building or structure, or, inside a building or structure nearest the point of entrance of the service conductors, not to exceed 10 feet of conductor length, from the point of entrance.
17. A disconnect is required to be within 30 feet of a mobile home. Four wire services are required from the disconnect to the subpanel (in the mobile home). The breaker in the disconnect shall be sized to protect the feeder to the subpanel. Modular homes, rated by the manufacturer 'For Permanent Foundation', may have the meter socket mounted directly on the structure.
18. The grounding electrode conductor, from the main disconnect, to a driven ground, shall be a minimum of #6 copper. The conductor shall be adequately protected. The driven grounds shown shall be a minimum of 5/8" in diameter and 8' long. See Paragraph 901 through 905 for details of the Service Ground.
19. The Utility recommends that the customer install an integral breaker/meter socket. The purpose of the breaker is to allow the customer to maintain their underground service without an expensive linecrew visit. Check with your Utility to determine whether the breaker is required.
20. Where subject to state or local electrical inspection, such inspection must be made prior to energizing.

VERMONT UTILITIES ELECTRIC SERVICE REQUIREMENTS	App'd: yes	DRAWING NUMBER 204 Page 3	
	DATE: 02/10		
	204pg3d.doc		

TYPICAL METER PEDESTAL

Notes:
21. The drawing pictures two 4x4 pressure treated posts comprising the support for the meter pedestal. The posts are labeled 'rated for soil contact'. That description, or more completely, 'Ground Contact and Fresh Water Use' is from the wood preservative treatment standard AWPA C2. 'Ground Contact' rated posts are acceptable. A lesser level of treatment, 'Above Ground', which is not intended to be in contact with soil, are not acceptable. A higher level of treatment 'Permanent Wood Foundation,' is preferred, because the timbers will have the longest life. There are several types of preservative chemicals referenced in this standard. Generally, this Manual does not specify which types of treatment may be used; however, posts treated with creosote, are strongly discouraged.
22. Currently available copper-based preservatives are very corrosive to steel items embedded in, and in contact with, the treated timber. Use stainless steel fasteners, and place a permanent barrier between the meter socket and the post.
23. Other factors, affecting the durability of a pedestal installation, are the depth of burial, the surface area of the post exposed to the soil, the type of backfill material, and the compression of the backfill material. Increasing the quality of these factors will result in a pedestal that is less likely to be overturned, by forces experienced in the environment.
24. Supports of descriptions, other than two 4x4 pressure treated posts (rated for soil contact) and buried 48" (min.) depth, may be preferred, or allowed, by particular Utilities. The alternative supports, listed below, are examples. The Customer/Contractor may suggest other alternative methods; however, the Utility retains the right to make a determination of acceptability.
   a) Larger dimension pressure treated wood (PTW) posts
   b) Posts with a greater burial depth
   c) Single posts supporting, at most, two sockets, on opposite sides of post
   d) Concrete posts
   e) Structural fiberglass, plastic, or plastic/wood posts
   f) Rigid hot-dipped galvanized steel conduit (RGSC) (minimum 2" dia.) posts. Individual conduit supports shall not be used as both a support and as a wire conduit. The two posts shall be embedded in 8" diameter-48" depth (minimum) concrete footings. The socket's neutral bus (and the socket) shall be connected to grounding electrodes and the posts shall be bonded to the socket, by metal Unistrut socket supports. The two posts shall be capped.
   g) Manufactured metal meter pedestals, direct embedded or mounted on concrete slab
   h) Socket support of pressure treated boards, or metal Unistrut, between the two posts

Meter Pedestal Variations	Applicability by Utility								
	GM	VE	WE	LE	HE	VJ	NE		
Meter Pedestals for other than Mobile Homes	O	U	O	N	U	U	O		
Two 4"x4" PTW Posts set 48" deep	O	U	P	P	P	O	O		
Two 6"x6" PTW Posts set 48" deep	O	P	O	O	O	P	O		
One 4"x12" PTW Posts set 60" deep (2 sockets max.)	O	U	N	O	N	N	O		
One 8"x8" PTW Posts set 60" deep (2 sockets max.)	O	U	N	O	N	N	O		
Two 2" RGSC Posts set in concrete 48" deep	O	O	N	O	N	O	N		
Alternate Materials (concrete, fiberglass, etc.)	U	U	N	U	U	U	U		
Manufactured Metal Pedestal direct embedded	N	N	N	N	N	N	N		
Manufactured Metal Pedestal on concrete slab	O	O	N	O	O	O	N		
Other Supports Suggested by Customer/Contractor	U	U	N	U	U	U	U		
PTW Board Socket Support (no plywood)	O	P	O	O	O	O	O		
Unistrut Socket Support	O	O	N	O	O	O	O		

U- Utility Option, O- Customer Option, P- Preferred Option, N- Not Available as an Option

VERMONT UTILITIES ELECTRIC SERVICE REQUIREMENTS	App'd: yes	DRAWING NUMBER 204 Page 4	
	DATE: 11/12		
	204pg4c.doc		

NOTES:

1. THE CONTRACTOR SHALL INSTALL FUSED, NEMA 3R, DISCONNECT SWITCH ON LOAD SIDE OF THE ELECTRIC METER.

REV	APPROVED DATE	DESCRIPTION	JCN	REDLINE DATE	APVD
	05/20/2013	CONSTRUCTION, WR #12738 (RUT)	992395	01/31/2013	

DEPARTMENT OF TRANSPORTATION
FEDERAL AVIATION ADMINISTRATION
ATO - TECHNICAL OPERATIONS — EASTERN SERVICE AREA

VASI
RUNWAY 19
MISCELLANEOUS DETAILS
SHEET 2 OF 2

RUTLAND — RUTLAND - SOUTHERN VERMONT REGIONAL AIRPORT — VT

REVIEWED BY	SUBMITTED BY	APPROVED BY	
	D.L.WYER	P.KIRBY	
	PROJECT ENGINEER	MGR: ENGINEERING - CENTER C	
	DESIGNED DLW	ISSUED BY ENGINEERING SERVICES NAVAIDS	DATE 05/20/2013 JCN 992395
	DRAWN RUT		DRAWING NO RUT-NEZ120016-C003 REV
	CHECKED DLW		

ISSUED FOR: CONSTRUCTION

PROJECT RECORD DRAWINGS
THIS DRAWING PRODUCED ON NEW ENGLAND REGION MICROSTATION SYSTEM

11/14/2013 3:03:23 PM Plotted by: Scott CTR Pettengill

EDMF: rut-nez120016-c003.dgn

TYPICALS FOR SLOPES IN SOLID ROCK EXCAVATION

THIS STANDARD TO BE USED IN AREAS OF LOW VOLUME TRAFFIC (ADT LESS THAN 400 V.P.D.)

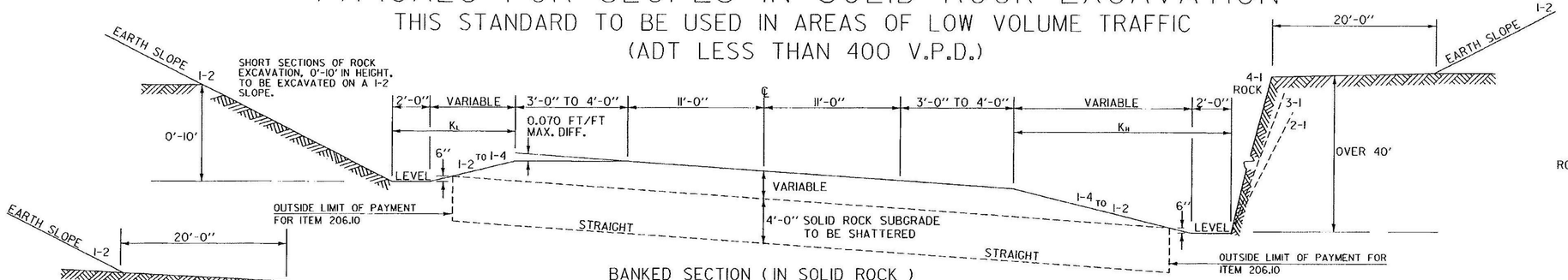

BANKED SECTION (IN SOLID ROCK)

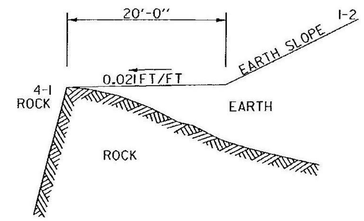

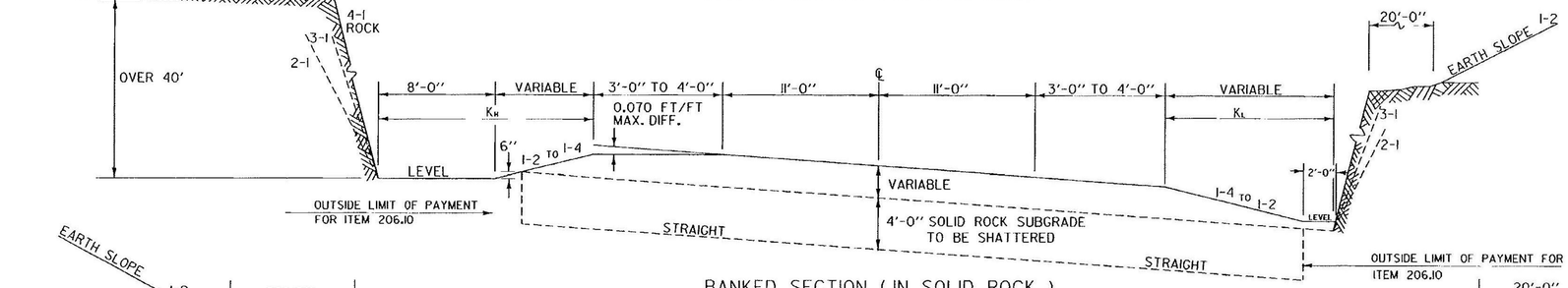

BANKED SECTION (IN SOLID ROCK)

THE CONTRACTOR SHOULD USE CARE IN BLASTING SOLID ROCK, SO THAT NO OVERHANGING LEDGE WILL RESULT. ANY OVERHANGING LEDGE, OUTSIDE THE NEAT LINE SHALL BE REMOVED AT THE CONTRACTORS EXPENSE.

FOR ROADWAY DETAILS INSIDE BACK OF DITCH SEE STANDARD TYPICAL FOR PARTICULAR CLASS OF ROADWAY INVOLVED.

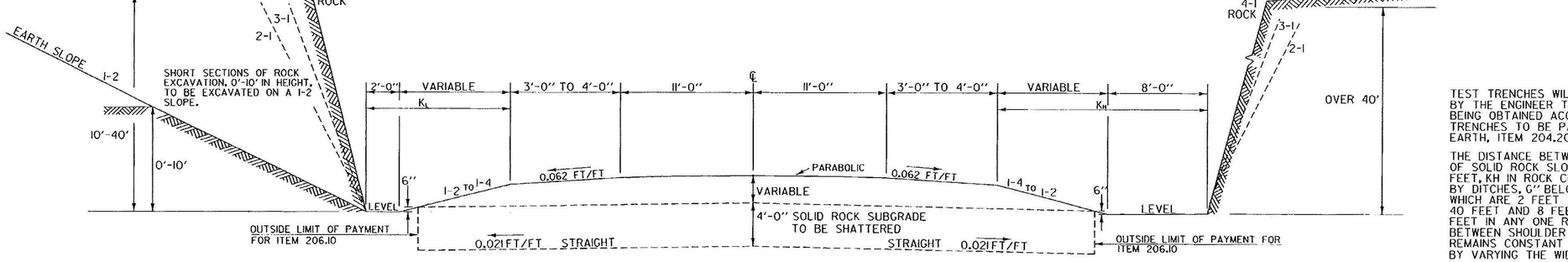

NORMAL SECTION (IN SOLID ROCK)

TEST TRENCHES WILL BE EXCAVATED AS ORDERED BY THE ENGINEER TO ASSURE REQUIRED RESULTS ARE BEING OBTAINED ACCORDING TO SECTION 206. TEST TRENCHES TO BE PAID AS TRENCH EXCAVATION OF EARTH, ITEM 204.20.

THE DISTANCE BETWEEN SHOULDER POINT AND FACE OF SOLID ROCK SLOPE (KL IN ROCK CUTS BELOW 40 FEET, KH IN ROCK CUTS ABOVE 40 FEET) IS DETERMINED BY DITCHES, 6" BELOW SUBGRADE ON NORMAL SECTION, WHICH ARE 2 FEET WIDE IN ROCK CUTS OF LESS THAN 40 FEET AND 8 FEET WIDE IN ROCK CUTS OVER 40 FEET IN ANY ONE ROCK CUT AREA. THE DISTANCE BETWEEN SHOULDER POINT AND FACE OF SOLID ROCK REMAINS CONSTANT IN A BANKED OR A NORMAL SECTION BY VARYING THE WIDTH OF THE DITCH.

SELECTION OF APPROPRIATE ROCK SLOPE TO BE DETERMINED FOR EACH ROCK EXCAVATION LOCATION.

REVISIONS AND CORRECTIONS

APRIL 2, 1986 - ORIGINAL APPROVAL DATE
JUNE 1, 1994 - REISSUED, WITHOUT CHANGE, UNDER NEW SIGNATURES.

APPROVED

APPROVED FOR THIS PROJECT AND/OR DESIGN IMPLEMENTATION. FHWA FINAL APPROVAL PENDING.

DIRECTOR OF ENGINEERING

DESIGN ENGINEER

STANDARD TYPICAL FOR SLOPES IN SOLID ROCK EXCAVATION DRILLING AND BLASTING OF SOLID ROCK SUBGRADE

VERMONT AGENCY OF TRANSPORTATION

STANDARD A-61

PROJECT RECORD DRAWINGS

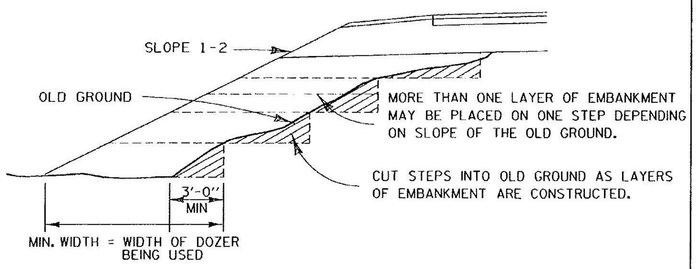

METHOD FOR CONSTRUCTING AN EMBANKMENT ON EARTH SLOPE

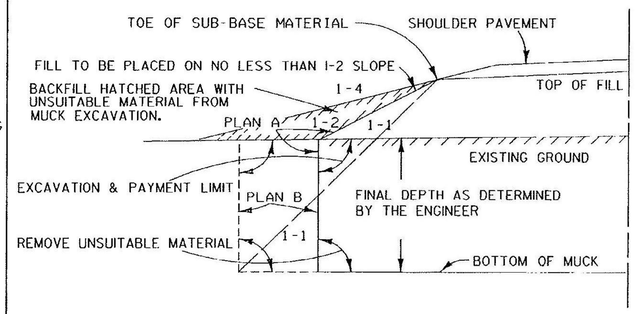

GENERAL NOTES :

THE MUCK OR UNSUITABLE MATERIAL SHALL BE EXCAVATED TO THE NEAT LINES SHOWN ON THE PLANS OR AS DETERMINED BY THE ENGINEER.

EXCAVATION AND PAYMENT LIMIT WILL BE DETERMINED FROM EITHER PLAN "A" OR PLAN "B", WHICHEVER PRODUCES THE GREATER WIDTH IN A GIVEN MUCK AREA.

BACKFILL MATERIAL MUST MEET THE REQUIREMENTS SET FORTH UNDER MUCK EXCAVATION,SECTION 203

TYPICAL NEAT PAY LINES FOR MUCK EXCAVATION

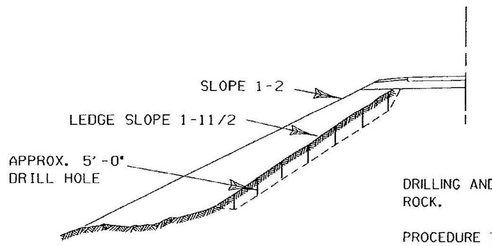

DRILL PATTERN

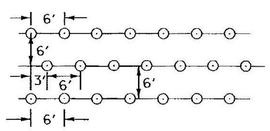

DRILLING AND BLASTING OF SOLID ROCK.

PROCEDURE TO BE FOLLOWED WHEN LEDGE SLOPE ON OLD GROUND IS BETWEEN A 1-1 AND A 1-5 SLOPE.

ALL HOLES TO BE APPROXIMATELY 5'-0" DEEP. HOLES TO BE IN ROWS, SPACED AND STAGGERED AS SHOWN IN DRILL PATTERN, OR AS DIRECTED BY THE ENGINEER, SEE SECTION 205

A METHOD FOR PREPARING LEDGE SLOPE BEFORE CONSTRUCTING AN EMBANKMENT

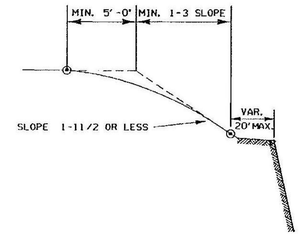

EARTH SECTIONS ABOVE STABLE ROCK OR EQUIVILENT OUTCROPS TO BE ROUNDED, AS FAR AS POSSIBLE AS THOUGH TOTAL HEIGHT OF SLOPE WAS IN EARTH CUT.

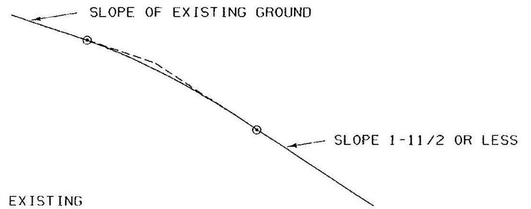

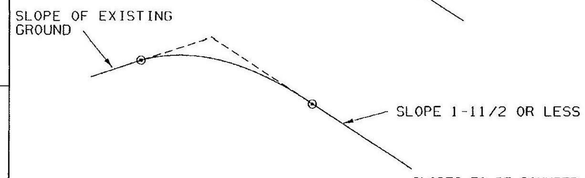

SLOPES TO BE ROUNDED AS SHOWN IN ORDER TO ALLOW FOR PERSPECTIVE FORESHORTENING AS SEEN FROM THE ROAD AND SO THAT FINISHED SLOPES WILL BETTER SUPPORT VEGETATIVE COVER.

ROUNDING TO MERGE WITH EXISTING GROUND SURFACE SO THAT NO HARD GRADE LINE WILL REMAIN WITHIN THE LINE OF SIGHT

WHEN STEEPNESS OF EXISTING GROUND OR PRESENCE OF EXISTING VEGETATION IS CONSIDERED A FACTOR PREVENTING NORMAL ROUNDING, THE EXTENT OF THE ROUNDING SHOULD BE MODIFIED TO MEET CONDITIONS.

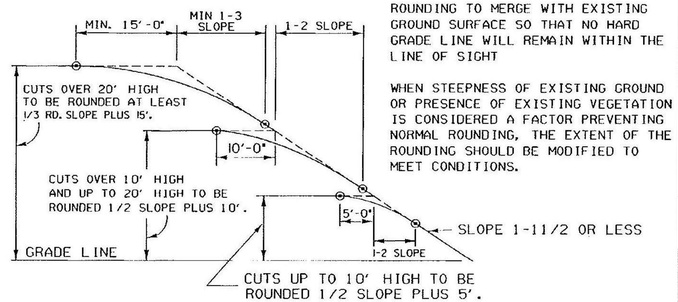

TYPICAL SLOPE ROUNDING

REVISIONS AND CORRECTIONS

DEC. 6, 1971 - ORIGINAL APPROVAL DATE

JUNE 1, 1994 - REISSUED, WITHOUT CHANGE, UNDER NEW SIGNATURES.

APPROVED

APPROVED FOR THIS PROJECT AND/OR DESIGN IMPLEMENTATION. FHWA FINAL APPROVAL PENDING.

Gordon S. MacCallum, P.E.
DIRECTOR OF ENGINEERING

Peter M. Murphy, P.E.
DESIGN ENGINEER

EMBANKMENT ON EARTH SLOPE
EMBANKMENT ON ROCK SLOPE
MUCK EXCAVATION
TYPICAL SLOPE ROUNDING

VERMONT AGENCY OF TRANSPORTATION

STANDARD B-5

PROJECT RECORD DRAWINGS

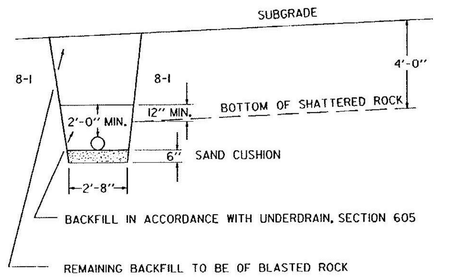

INSET " A "

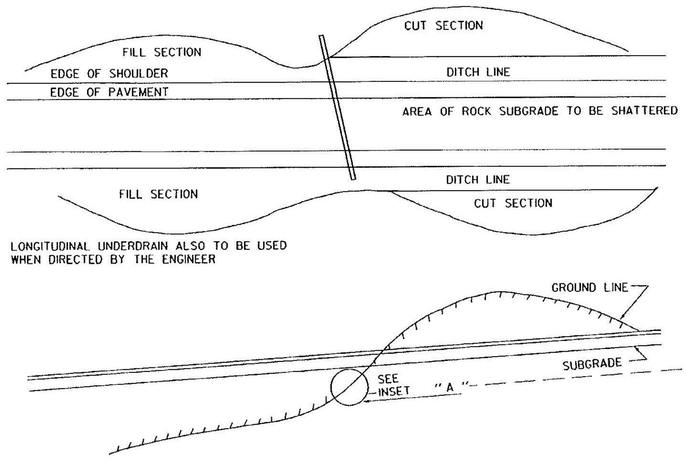

USE OF UNDERDRAIN WITH SHATTERED ROCK SUBGRADE

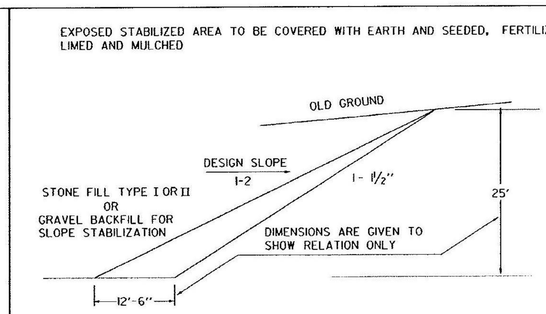

BLANKET OF VARYING DEPTH

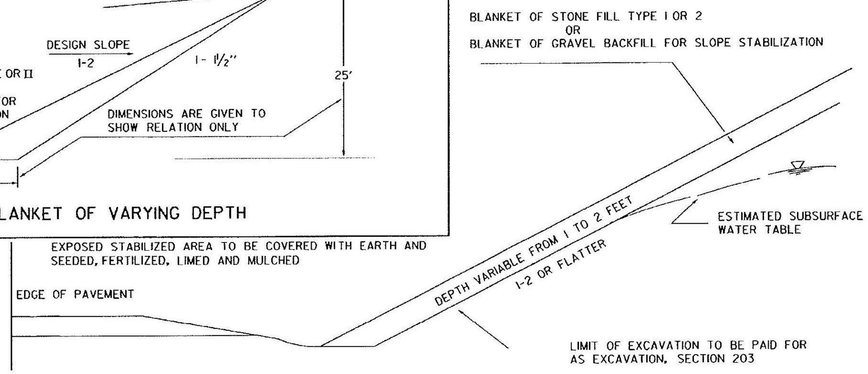

BLANKET SLOPE STABILIZATION METHOD

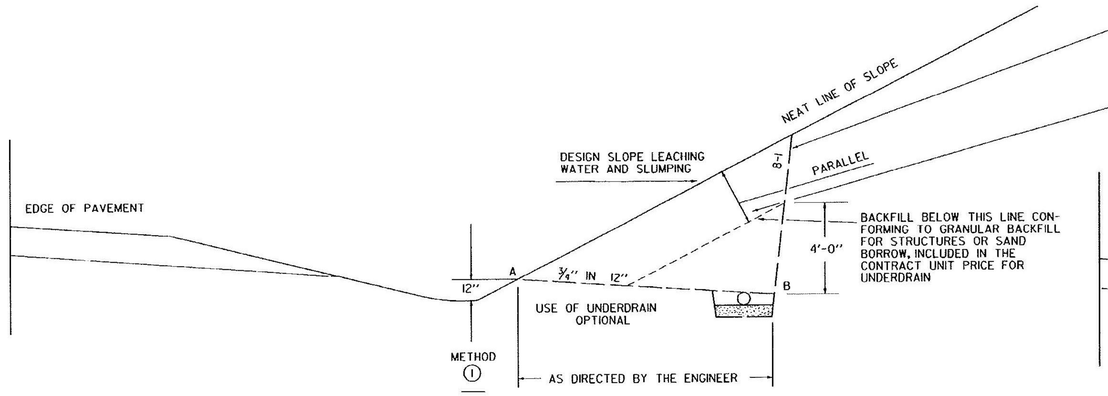

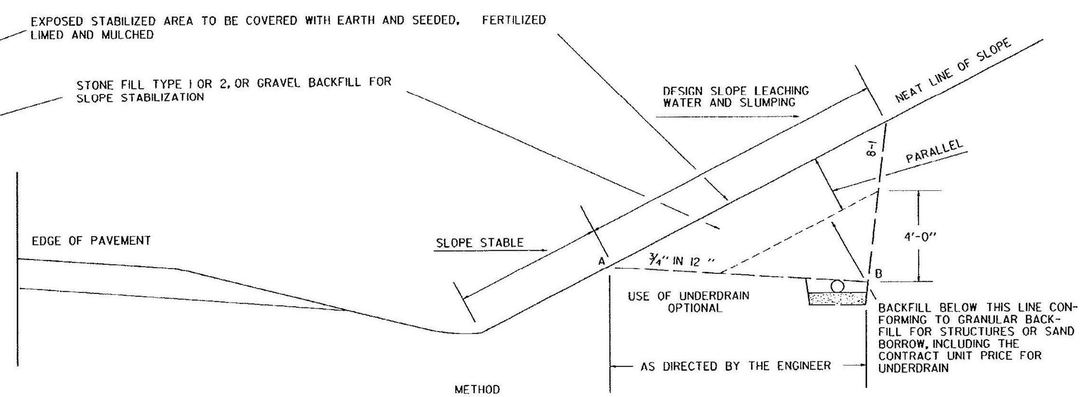

WHEN A NEWLY CONSTRUCTED SLOPE IS LEACHING WATER AND SLUMPING, IT CAN BE STABILIZED BY ONE OF THE SUGGESTED METHODS SHOWN ABOVE. EXCAVATION ABOVE LINE A-B, TO BE PAID FOR AS EXCAVATION, SECTION 203.
GRAVEL USED FOR BACKFILL TO MEET THE SPECIFICATIONS AND TO BE PAID FOR AS GRAVEL BACKFILL FOR SLOPE STABILIZATION.
ROCK USED FOR BACKFILL TO MEET THE SPECIFICATIONS AND TO BE PAID FOR AS STONE FILL, TYPES I OR II.
EXCAVATION BELOW LINE A-B, TO BE PAID FOR AS TRENCH EXCAVATION.

REVISIONS AND CORRECTIONS

DEC. 6, 1971 - ORIGINAL APPROVAL DATE
DEC. 12, 1974 - STONE FILL ADDED FOR STABILIZATION
JUNE 1, 1994 - REISSUED, WITHOUT CHANGE, UNDER NEW SIGNATURES.

APPROVED

APPROVED FOR THIS PROJECT AND/OR DESIGN IMPLEMENTATION, FHWA FINAL APPROVAL PENDING

Gordon S. MacArthur P.E.
DIRECTOR OF ENGINEERING

Robert M. Murphy P.E.
DESIGN ENGINEER

USE OF UNDERDRAIN WITH SHATTERED ROCK SUBGRADE

METHODS OF SLOPE STABILIZATION

VERMONT AGENCY OF TRANSPORTATION

STANDARD
B-11

PROJECT RECORD DRAWINGS

DETAILS OF CURB DRAINS

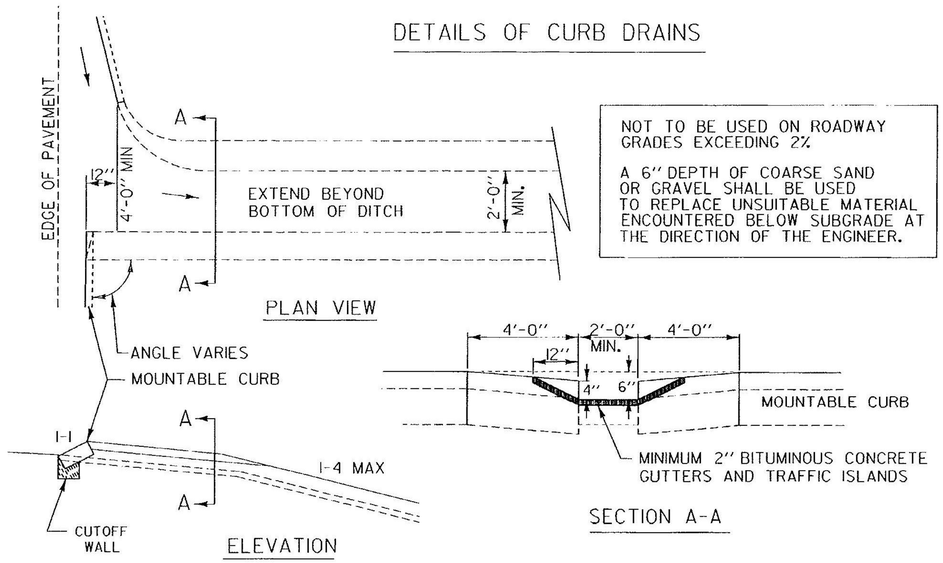

NOT TO BE USED ON ROADWAY GRADES EXCEEDING 2%

A 6'' DEPTH OF COARSE SAND OR GRAVEL SHALL BE USED TO REPLACE UNSUITABLE MATERIAL ENCOUNTERED BELOW SUBGRADE AT THE DIRECTION OF THE ENGINEER.

DROP INLET WITH GRATE IN TREATED GUTTER

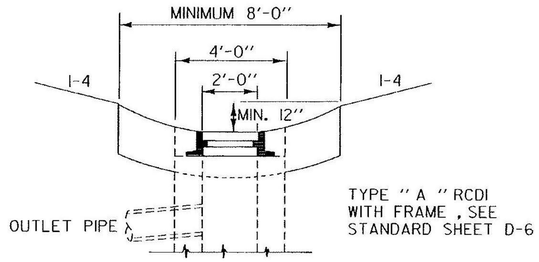

SODDING

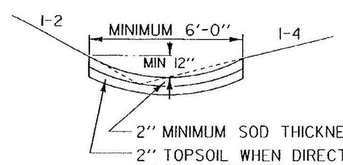

STONE FILL TYPE I
STONE FILL TYPE II

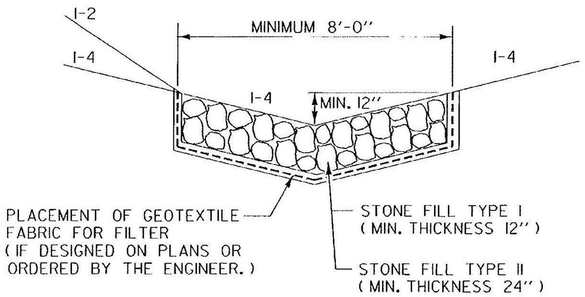

EXCAVATION PAID FOR AS COMMON EXCAVATION.

BITUMINOUS CONCRETE GUTTERS AND TRAFFIC ISLANDS

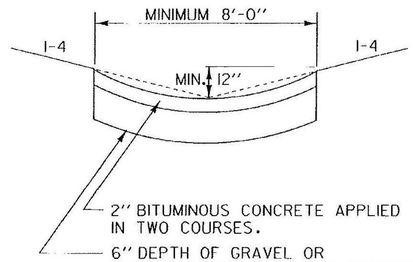

PORTLAND CEMENT CONCRETE GUTTER

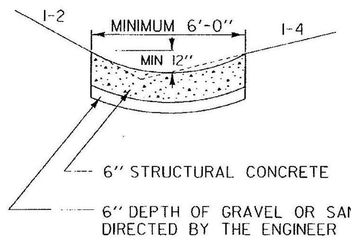

ON ALL OVERLAPS , PLACE STAPLES EVERY 18'', ALTERNATING ON BOTH SIDES OF 6'' OVERLAP.

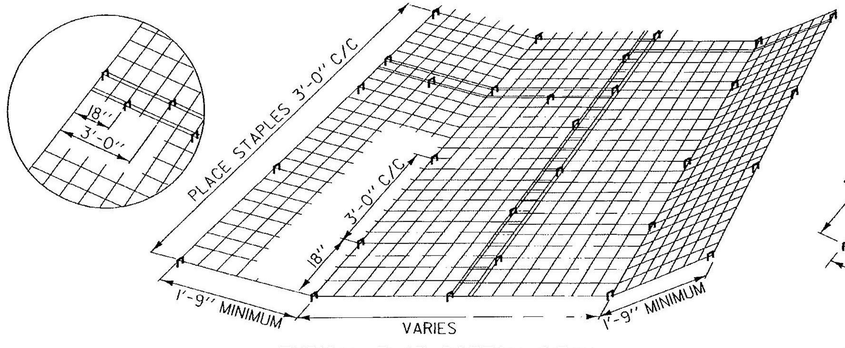

TYPICAL FLAT BOTTOM DITCH

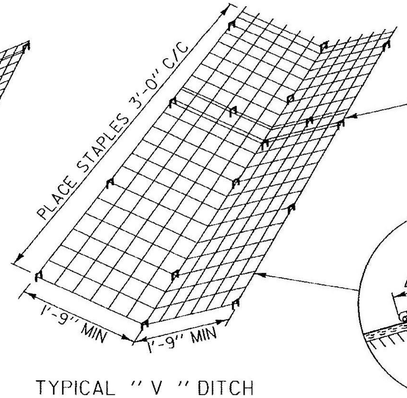

TYPICAL '' V '' DITCH

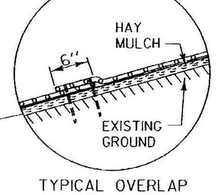

TYPICAL OVERLAP

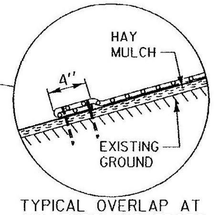

TYPICAL OVERLAP AT ALL ENDS AND EDGES

DETAILS OF PLACING EROSION MATTING

REVISIONS AND CORRECTIONS

APR. 2, 1986 - ORIGINAL APPROVAL DATE

JUNE 1, 1994 - REISSUED. WITHOUT CHANGE, UNDER NEW SIGNATURES.

APPROVED

APPROVED FOR THIS PROJECT AND/OR DESIGN IMPLEMENTATION. FHWA FINAL APPROVAL PENDING.

Frederick W. Wilson, P.E.
DIRECTOR OF ENGINEERING

Robert M. Murphy, P.E.
DESIGN ENGINEER

TREATED GUTTERS

VERMONT AGENCY OF TRANSPORTATION

STANDARD D-3

PROJECT RECORD DRAWINGS

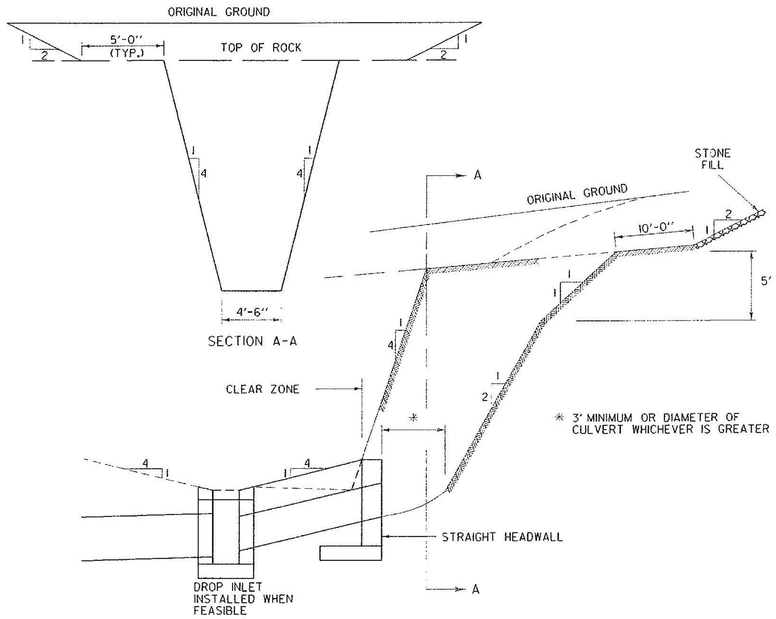

TYPICAL WATERFALL FOR CULVERTS

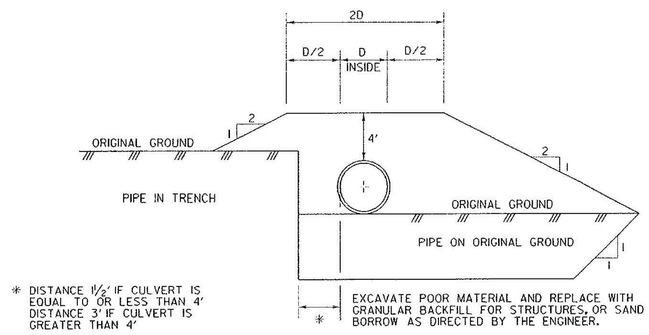

GRANULAR MATERIAL AT METAL CULVERT LOCATIONS
(MAX SIZE CULVERT 10')

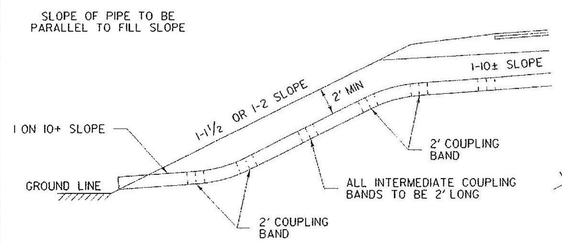

TYPICAL APPLICATION
OF CORRUGATED ELBOW
ON HIGH FILL

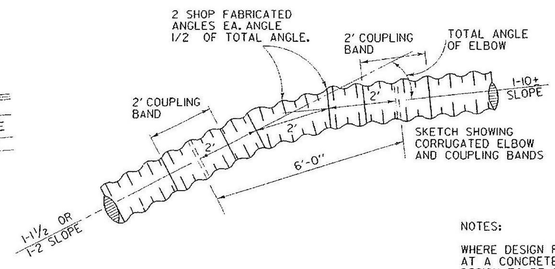

CORRUGATED PIPE ELBOW

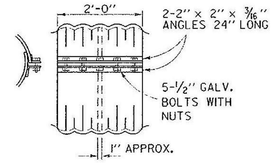

DETAILS FOR
COUPLING BAND

NOTES:

WHERE DESIGN FOR SLOPE PIPE AND ELBOWS START AT A CONCRETE JUNCTION BOX OR DROP INLET, DESIGN TO BE SUCH AS TO PERMIT A 2' LONG SECTION OF PIPE THRU THE STRUCTURE WALL TO WHICH THE CORRUGATED ELBOW WILL BE ATTACHED.

COUPLING BANDS 1'-9" LONG MAY BE USED IN CONJUNCTION WITH PIPE FABRICATED WITH HELICAL CORRUGATIONS IN PLACE OF CIRCUMFERENTIAL CORRUGATED BANDS 2' LONG.

BANDS CONFORMING TO SECTION 711 AND EQUIPPED WITH SILO RODS OR CABLES FOR POSITIVE ATTACHMENT MAY ALSO BE USED IN LIEU OF THE COUPLING BAND SHOWN.

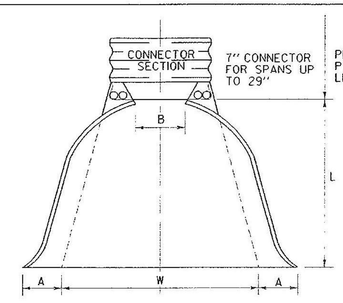

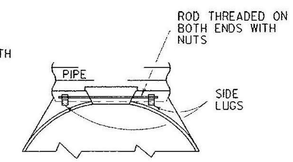

FOR 18" x 11" THRU 29" x 18"

TOE PLATE TO BE PUNCHED TO MATCH HOLES IN SKIRT LIP. ⅜" GALV. BOLTS TO BE FURNISHED. LENGTH OF TOE PLATE W+10" FOR PIPE ARCHES WITH RISE 11" TO 18" INCL.

SKIRT SECTION FOR PIPE-ARCHES WITH RISE OF 11" TO 18" INCL. TO BE MADE IN ONE PIECE.

CONNECTOR SECTION, CORNER PLATE, AND TOE PLATE TO BE SAME GAUGE AS SKIRT.

PIPE ARCH DIMENSIONS		THICK	DIMENSIONS					APP. SLOPE	BODY
SPAN	RISE		A 1" ±	B MAX.	H 1" ±	L 1½"±	W 2" ±		
18	11	.064	7	9	6	19	30	2½	1 PC
22	13	.064	7	10	6	23	36	2½	1 PC
29	18	.064	9	14	6	32	48	2½	1 PC

CORRUGATED PIPE ARCH END SECTION

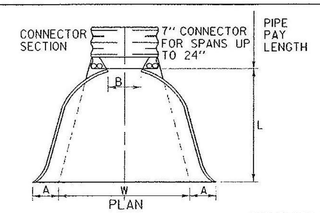

ALTERNATE CONNECTIONS

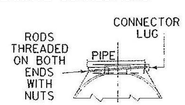

FOR 12" THRU 24"

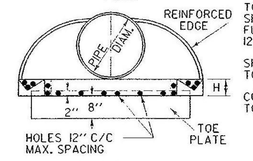

TYPICAL CROSS-SECTION

TOE PLATE TO BE PUNCHED TO MATCH HOLES IN SKIRT LIP. ⅜" GALVANIZED BOLTS TO BE FURNISHED. LENGTH OF TOE PLATE IS W+10" FOR 12" TO 24" DIA. PIPE INCL.

SKIRT SECTION FOR 12" TO 24" DIAMETER PIPE INCL. TO BE MADE IN ONE PIECE.

CONNECTOR SECTION, CORNER PLATE, AND TOE PLATE TO BE SAME GAUGE AS SKIRT.

PIPE DIAM.	THICK	DIMENSIONS					APP. SLOPE	BODY
		A 1" ±	B MAX.	H 1" ±	L 1½"±	W 2" ±		
12	.064	6	6	6	21	24	2½	1 PC
15	.064	7	8	6	26	30	2½	1 PC
18	.064	8	10	6	31	36	2½	1 PC
21	.064	9	12	6	36	42	2½	1 PC
24	.064	10	13	6	41	48	2½	1 PC

CORRUGATED PIPE END SECTION

NOT TO SCALE

REVISIONS AND CORRECTIONS

DEC. 6, 1971 - ORIGINAL APPROVAL DATE.
JULY 24, 1975 - GRANULAR MATERIAL AT CULVERT LOCATIONS CORRECTED.
OCT. 30, 1985 - REVISED TO CONFORM TO 1986 SPECIFICATIONS.
JUNE 1, 1994 - REISSUED, WITHOUT CHANGE, UNDER NEW SIGNATURES.
AUG 13, 2007 - MINOR CORRECTIONS & REVISIONS DELETED EXTERIOR SERVICE BOX AND CURB STOP. MOVED UNDERDRAIN RISER TO STD D-30.

APPROVED

Kevin A. Marchia
ROADWAY, TRAFFIC & SAFETY ENGINEER

Richard Tetreault
DIRECTOR OF PROGRAM DEVELOPMENT

Mark D. Richter
FEDERAL HIGHWAY ADMINISTRATION

CORRUGATED PIPE END SECTION, ARCH END SECTION, AND ELBOW
GRANULAR MATERIAL AT METAL CULVERT LOCATIONS
TYPICAL WATERFALL FOR CULVERTS

VERMONT AGENCY OF TRANSPORTATION

STANDARD
D-4

PROJECT RECORD DRAWINGS

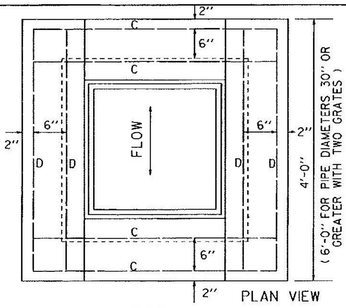

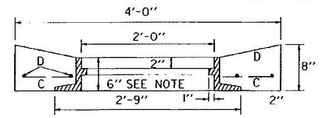

NOTE : FRAME SHOWN IS FOR TYPE A GRATE, SEE SHEET D-11. FOR TYPE B GRATE AND FRAME, SEE SHEET D-16 (EXCEPT THE FRAME DEPTH DIMENSION SHALL BE 6"). TOP FOR REINFORCED CONCRETE DROP INLET WITH GRATE FOR USE IN DITCHES

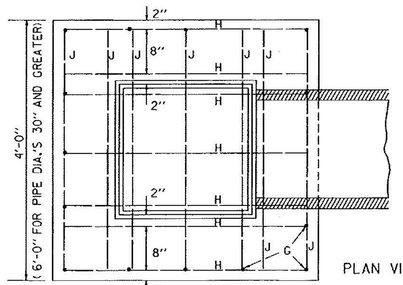

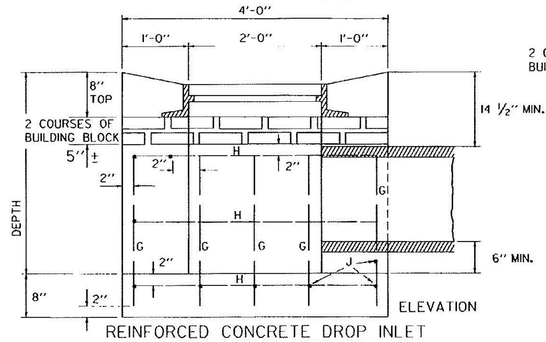

REINFORCED CONCRETE DROP INLET FOR USE IN DITCHES

STEEL SCHEDULE

4'x4' DROP INLET TYPE A 12", 15", 18", 24"							4'x6' DROP INLET WITH TWO GRATES TYPE B 30", 36"										TYPE C 4'x6' DROP INLET WITH ONE GRATE WITH 4'x6' TOP 30", 36"										
DEPTH	G	LENGTH	H,J	LENGTH	C,D	LENGTH	G	LENGTH	H	LENGTH	J	LENGTH	C	LENGTH	D	LENGTH	DEPTH	G	LENGTH	H	LENGTH	J	LENGTH	C	LENGTH	D	LENGTH	DEPTH
3'-0"	15	2'-3"	22	3'-8"	8	3'-8"											3'-0"											
3'-6"	15	2'-9"	22	3'-8"	8	3'-8"											3'-6"											
4'-0"	15	3'-3"	29	3'-8"	8	3'-8"	17	3'-3"	19	3'-8"	10	5'-8"	4	3'-8"	4	5'-8"	4'-0"	17	3'-8"	19	3'-8"	10	5'-8"	6	3'-8"	4	5'-8"	4'-0"
4'-6"	15	3'-9"	29	3'-8"	8	3'-8"	17	3'-9"	19	3'-8"	10	5'-8"	4	3'-8"	4	5'-8"	4'-6"	17	4'-2"	19	3'-8"	10	5'-8"	6	3'-8"	4	5'-8"	4'-6"
5'-0"	15	4'-3"	35	3'-8"	8	3'-8"	17	4'-3"	23	3'-8"	13	5'-8"	4	3'-8"	4	5'-8"	5'-0"	17	4'-8"	23	3'-8"	13	5'-8"	6	3'-8"	4	5'-8"	5'-0"
5'-6"	15	4'-9"	35	3'-8"	8	3'-8"	17	4'-9"	23	3'-8"	13	5'-8"	4	3'-8"	4	5'-8"	5'-6"	17	5'-2"	23	3'-8"	13	5'-8"	6	3'-8"	4	5'-8"	5'-6"
6'-0"	15	5'-3"	41	3'-8"	8	3'-8"	17	5'-3"	27	3'-8"	15	5'-8"	4	3'-8"	4	5'-8"	6'-0"	17	5'-8"	27	3'-8"	15	5'-8"	6	3'-8"	4	5'-8"	6'-0"
6'-6"	15	5'-9"	41	3'-8"	8	3'-8"	17	5'-9"	31	3'-8"	15	5'-8"	4	3'-8"	4	5'-8"	6'-6"	17	6'-2"	31	3'-8"	15	5'-8"	6	3'-8"	4	5'-8"	6'-6"
7'-0"	15	6'-3"	47	3'-8"	8	3'-8"	17	6'-3"	35	3'-8"	17	5'-8"	4	3'-8"	4	5'-8"	7'-0"	17	6'-8"	35	3'-8"	17	5'-8"	6	3'-8"	4	5'-8"	7'-0"
7'-6"	15	6'-9"	47	3'-8"	8	3'-8"	17	6'-9"	35	3'-8"	17	5'-8"	4	3'-8"	4	5'-8"	7'-6"	17	7'-2"	35	3'-8"	17	5'-8"	6	3'-8"	4	5'-8"	7'-6"
8'-0"	15	7'-3"	53	3'-8"	8	3'-8"	17	7'-3"	39	3'-8"	19	5'-8"	4	3'-8"	4	5'-8"	8'-0"	17	7'-8"	39	3'-8"	19	5'-8"	6	3'-8"	4	5'-8"	8'-0"

STEEL AND CONCRETE QUANTITIES

4'x4'DROP INLET 12"-15"-18"-24" TYPE A			4'x6' DROP INLET WITH TWO GRATES 30" TYPE B 36"					4'x6' DROP INLET WITH ONE GRATES 30" TYPE C 36"															
DEPTH	CONC. C.Y.	STEEL LBS	CONC. C.Y.	STEEL LBS	CONC. * C.Y.	STEEL LBS	DEPTH	CONC. C.Y.	STEEL LBS	CONC. C.Y.	STEEL LBS	DEPTH	G	LENGTH	H	LENGTH	J	LENGTH	C	LENGTH	D	LENGTH	DEPTH
3'-0"	1.7	150					3'-0"																
3'-6"	1.9	158					3'-6"																
4'-0"	2.1	193	2.7	228			4'-0"	2.8	244														
4'-6"	2.3	200	3.0	237	2.9	237	4'-6"	3.1	252	3.0	252	4'-6"	17	3'-7"	23	3'-8"	13	5'-8"	12	3'-8"	4	5'-8"	4'-0"
5'-0"	2.6	231	3.3	279	3.2	279	5'-0"	3.4	294	3.3	294	5'-0"									4	3'-8"	
5'-6"	2.8	239	3.6	288	3.5	288	5'-6"	3.7	303	3.6	303	5'-6"	17	4'-1"	23	3'-8"	13	5'-8"	12	3'-8"	4	5'-8"	5'-6"
6'-0"	3.0	270	3.9	324	3.8	324	6'-0"	4.0	339	3.9	339	6'-0"									4	3'-8"	
6'-6"	3.2	278	4.2	348	4.1	348	6'-6"	4.3	363	4.2	363	6'-6"	17	4'-7"	27	3'-8"	15	5'-8"	12	3'-8"	4	5'-8"	6'-0"
7'-0"	3.5	308	4.5	384	4.4	384	7'-0"	4.6	399	4.5	399	7'-0"									4	3'-8"	
7'-6"	3.7	316	4.8	393	4.7	393	7'-6"	4.9	408	4.8	408	7'-6"	17	5'-1"	31	3'-8"	15	5'-8"	12	3'-8"	4	5'-8"	6'-6"
8'-0"	3.9	347	5.1	429	5.0	429	8'-0"	5.2	444	5.1	444	8'-0"									4	3'-8"	
													17	5'-7"	35	3'-8"	17	5'-8"	12	3'-8"	4	5'-8"	7'-0"
																					4	3'-8"	
													17	6'-1"	35	3'-8"	17	5'-8"	12	3'-8"	4	5'-8"	7'-6"
																					4	3'-8"	
													17	6'-7"	39	3'-8"	19	5'-8"	12	3'-8"	4	5'-8"	8'-0"
																					4	3'-8"	

FOR 2nd 30" PIPE DEDUCT 0.18 C.Y. FOR 2nd 42" PIPE DEDUCT 0.36 C.Y., OR 0.18 FOR 1 PIPE
FOR 2nd 36" PIPE DEDUCT 0.26 C.Y. FOR 2nd 48" PIPE DEDUCT 0.47 C.Y., OR 0.24 FOR 1 PIPE

ALL REINFORCING STEEL TO BE NO. 5 DEFORMED BARS, EVENLY SPACED WITH A MAXIMUM SPACING OF 12" C/C.

ALL STEEL TO HAVE 2 INCH MIN. COVER.

DROP INLET TO BE CONSTRUCTURED IN ACCORDANCE WITH STRUCTURAL CONCRETE, SECTION 501.

GRATES TO CONFORM TO DROP INLETS, CATCH BASINS, AND MANHOLES, SECTION 604.

FURNISHING AND LAYING OF BRICKS FOR ADJUSTING ELEVATION OF GRATE SHALL BE INCLUDED IN UNIT BID PRICE FOR CONCRETE, CLASS B, PAY ITEM 501.25, AND THEIR VOLUME TO BE INCLUDED IN THE FINAL QUANTITIES.

MORTAR, TYPE II, TO BE USED AS JOINT FILLER AND LAYING OF BRICK.

FOR PIPES OF 30" OR MORE IN DIAMETER, ALLOWANCE SHALL BE MADE FOR THE OPENING IN COMPUTING CONCRETE VOLUMES. THIS DEDUCTION WILL BE BASED ON THE RATED DIAMETER OF THE PIPE USED, WITH THE SAME DEDUCTION FOR CONCRETE AND METAL PIPE. ABOVE TABLES INDICATE DEDUCTION FOR ONE PIPE.

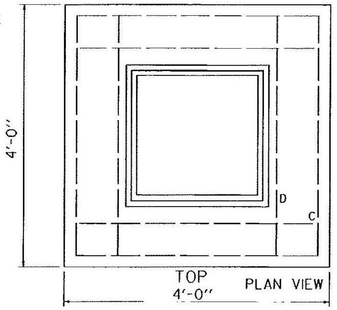

- TYPE D -

STEEL AND CONCRETE QUANTITIES
4'x6' DROP INLET WITH ONE GRATE WITH 4'x4' TOP TYPE D

DEPTH	30" STEEL LBS	30" CONC. C.Y.	36" CONC. C.Y.	36" STEEL LBS
5'-0"	3.2	313	3.1	313
5'-6"	3.5	322	3.4	322
6'-0"	3.8	358	3.7	358
6'-6"	4.1	382	4.0	382
7'-0"	4.4	418	4.3	418
7'-6"	4.7	427	4.6	427
8'-0"	5.0	463	4.9	463

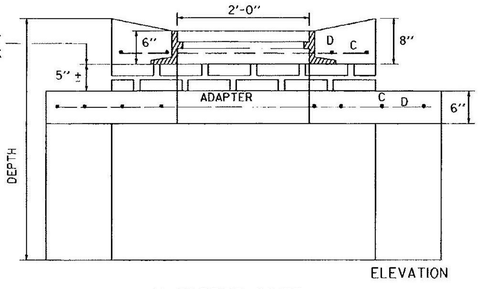

4'x6' DROP INLET
WITH 4'x4' TOP
TOP WITH ONE CAST IRON GRATE

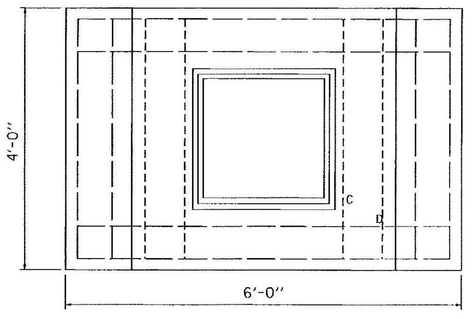

TOP AND ADAPTER

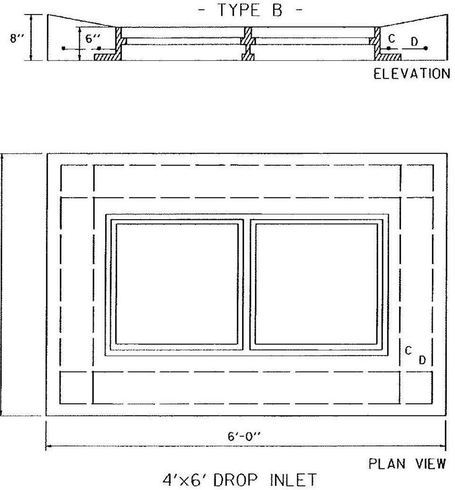

4'x6' DROP INLET
TOP WITH TWO CAST IRON GRATES

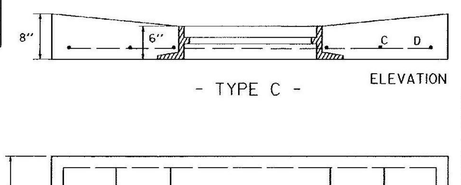

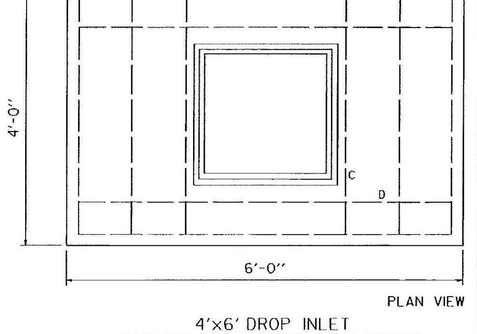

4'x6' DROP INLET
TOP WITH ONE CAST IRON GRATE

REVISIONS AND CORRECTIONS

APR. 4, 1973 - ORIGINAL APPROVAL

JUNE 1, 1994 - REISSUED, WITHOUT CHANGE, UNDER NEW SIGNATURES.

APPROVED

APPROVED FOR THIS PROJECT AND/OR DESIGN IMPLEMENTATION. FHWA FINAL APPROVAL PENDING.

Gordon S. MacArthur, P.E.
DIRECTOR OF ENGINEERING

Joseph M. Murphy, P.E.
DESIGN ENGINEER

REINFORCED CONCRETE DROP INLET WITH GRATE FOR USE IN DITCHES

VERMONT AGENCY OF TRANSPORTATION

STANDARD D-6

PROJECT RECORD DRAWINGS

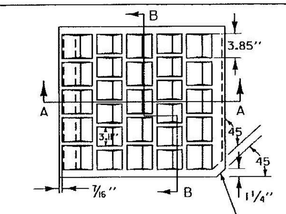

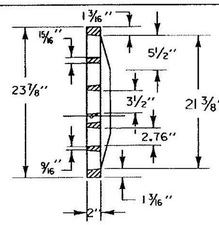

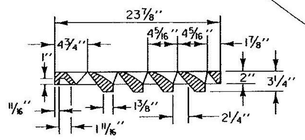

NOTE: THIS CORNER LEFT OFF FOR 'RIGHT' GRATE DIAGONALLY OPPOSITE CORNER FOR 'LEFT' GRATE TO FIT IN KEYED FRAMES.

THIS CORNER LEFT OFF FOR 'RIGHT' GRATE, DIAG. OPPOSITE CORNER FOR 'LEFT' GRATE, TO FIT IN KEYED FRAMES.

TYPE 'E' GRATE
(NOT TO SCALE)

NOTE: ALTERNATE TYPE E GRATE BELOW

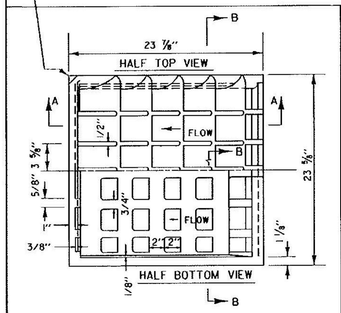

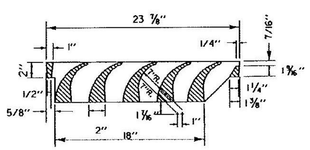

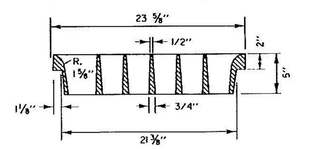

SECTION B-B

CAST IRON GRATE
TYPE E

NOTE: THIS FRAME TO BE PLACED IN DROP INLET TOP BEFORE CONCRETE IS POURED.

4 FLANGES UNLESS OTHERWISE INDICATED.

FRAMES TO BE FURNISHED WITH 3 FLANGES WHEH USED IN CONJUNCTION WITH CURB OR AS DIRECTED BY THE ENGINEER.

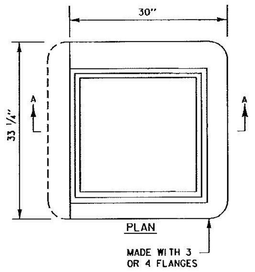

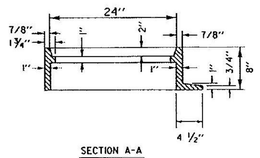

SECTION A-A

FRAME
FOR
TYPE D OR TYPE E
GRATE

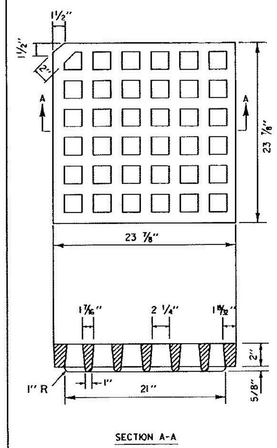

SECTION A-A

CAST IRON GRATE
TYPE D

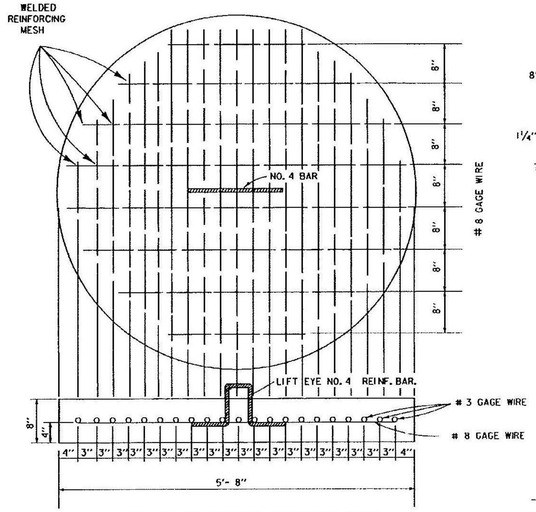

PRECAST REINFORCED CONCRETE BASE

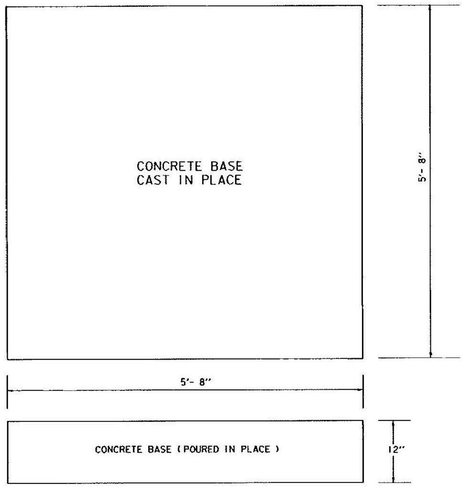

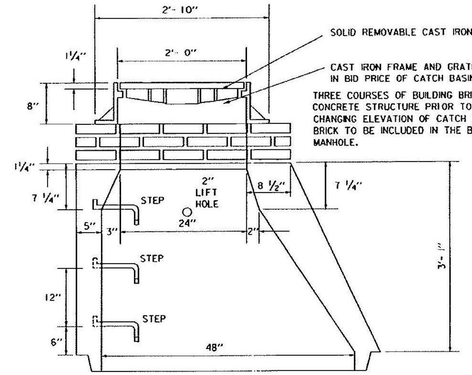

SOLID REMOVABLE CAST IRON COVER OR GRATE

CAST IRON FRAME AND GRATE, OR COVER, TO BE INCLUDED IN BID PRICE OF CATCH BASIN OR MANHOLE.

THREE COURSES OF BUILDING BRICK TO BE PLACED ON TOP OF CONCRETE STRUCTURE PRIOR TO PLACING FRAME TO FACILITATE CHANGING ELEVATION OF CATCH BASIN OR MANHOLE WHEN REQUIRED. BRICK TO BE INCLUDED IN THE BID PRICE FOR CATCH BASIN OR MANHOLE.

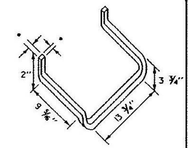

ALUMINUM STEP
(DROP FRONT)

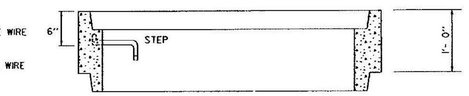

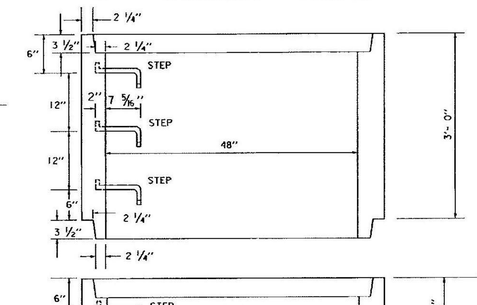

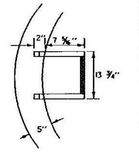

STEP DETAIL
TOP VIEW

* - INDIVIDUAL METAL RUNGS SHALL HAVE A MINIMUM DIMENSION OF 1" OR SHALL BE PAINTED OR OTHERWISE TREATED TO RESIST CORROSION AND RUSTING.

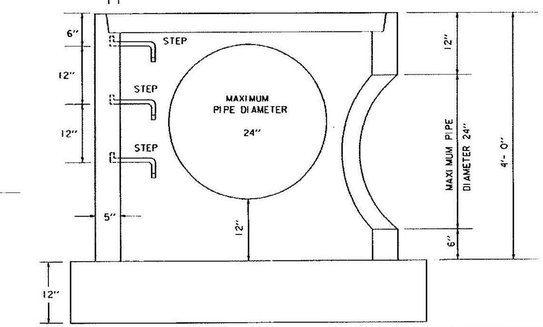

REVISIONS AND CORRECTIONS

DEC. 6, 1971 - ORIGINAL APPROVAL
OCT. 22, 1976 - CAST IRON GRATE WITH FRAME, TYPE E ADDED
OCT. 6, 1978 - TYPE D GRATE ADDED
OCT. 30, 1985 - IMPERFECT TRENCH DETAILS DELETED
FEB. 17, 1993 - SECOND CAST IRON GRATE TYPE E ADDED.
MAR. 23, 1994 - ADDED NOTE FOR STEP DETAILS
JUNE 1, 1994 - REISSUED, WITHOUT CHANGE, UNDER NEW SIGNATURES.

APPROVED

APPROVED FOR THIS PROJECT AND/OR DESIGN IMPLEMENTATION. FHWA FINAL APPROVAL PENDING.

Gordon B. MacArthur
DIRECTOR OF ENGINEERING

Robert M. Murphy
DESIGN ENGINEER

PRECAST REINFORCED CONCRETE CATCH BASIN W/ CAST IRON GRATE
PRECAST REINFORCED CONCRETE MANHOLE W/ CAST IRON COVER

CAST IRON GRATE WITH FRAME, TYPE D
CAST IRON GRATE WITH FRAME, TYPE E

VERMONT AGENCY OF TRANSPORTATION

STANDARD
D-15

PROJECT RECORD DRAWINGS

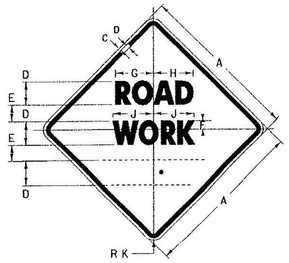

W20-1

• SEE DISTANCE DETAILS

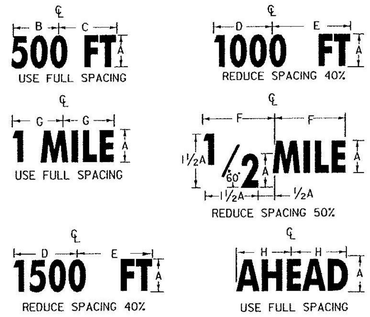

DISTANCE DETAILS

SIGN	DIMENSIONS (INCHES)									
	A	B	C	D	E	F	G	H	J	K
MIN.	36	5/8	7/8	5D	3 1/2	3 1/4	8 3/8	8 7/8	9	2 1/4
STD.	48	3/4	1 1/4	7D	4 3/4	4 1/2	11 11/16	12 7/16	12 5/8	3

DIMENSIONS (INCHES)							
A	B	C	D	E	F	G	H
5D	10 3/16	10 3/16	11 5/8	11 1/4	11 1/4	9 1/2	10 7/8
7D	14 1/4	15 1/8	14 7/8	15 3/4	15 3/4	13 1/16	15 1/2

(ALL DIMENSIONS SHOWN IN INCHES)

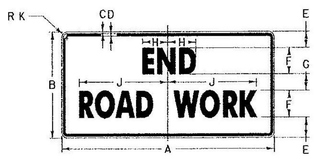

G20-2A

SIGN	DIMENSIONS (INCHES)									
	A	B	C	D	E	F	G	H	J	K
MIN.	36	18	5/8	7/8	3 3/4	4C	2 1/2	4	12 5/8	2 1/4
STD.	48	24	3/4	1 1/4	4 1/8	6C	3 3/4	5 7/8	22	3

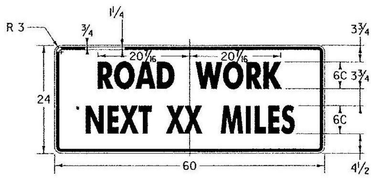

G20-1

• OPTICALLY CENTER

THIS SIGN TO BE USED WHEN PROJECT LENGTH EXCEEDS 2 MILES OR AS REQUESTED BY THE RESIDENT ENGINEER. SHOW MILEAGE TO NEAREST 1/4 MILE USING FRACTIONS, NOT DECIMALS. HAND LETTERING OF MILEAGE WILL NOT BE ALLOWED.

NOTES

THE SIGNS SHOWN ON THIS SHEET ARE INTENDED FOR USE IN PROVIDING ADVANCE WARNING AND INFORMATION ON CONSTRUCTION PROJECTS OVER WHICH TRAFFIC WILL BE MAINTAINED. WHEN ADDITIONAL APPROACH SIGNS OR OTHER TYPES OF ADVANCE SIGNING OR CONTROL ARE NECESSARY, THE PLANS AND/OR THE SPECIFICATIONS FOR THAT PROJECT WILL GIVE THE DETAILS OF THE SIGNS AND DEVICES REQUIRED. FOR ON-PROJECT CONSTRUCTION SIGNS, REFER TO APPROPRIATE STANDARD SHEETS.

APPLICATION OF STANDARDS

SINCE IT IS NOT POSSIBLE TO PRESCRIBE DETAILED STANDARDS OF APPLICATION FOR ALL OF THE SITUATIONS THAT MAY CONCEIVABLY ARISE ON A CONSTRUCTION PROJECT, REFERENCE SHALL BE MADE TO THE "MANUAL ON UNIFORM TRAFFIC CONTROL DEVICES" FOR THE PRINCIPLES, PROCEDURES, AND STANDARDS THAT WILL BE REQUIRED IN CONNECTION WITH ADVANCED WARNING AND ON-PROJECT CONSTRUCTION SIGNS AND BARRICADES. THE SIGNS SHOWN IN E-101 AND E-102 REPRESENT A SAMPLE OF THOSE MORE COMMONLY USED.

LOCATION

THE SIGNS SHALL BE LOCATED AS DETAILED ON THIS SHEET OR AS OTHERWISE SHOWN ON THE PLANS. THEY SHALL APPEAR AT EACH END OF THE HIGHWAY UNDER CONSTRUCTION AND ON ALL INTERSECTING PUBLIC HIGHWAYS. THE ENGINEER SHALL DETERMINE THE EXACT LOCATIONS.

DESIGN

LETTERS, DIGITS, ARROWS, SPACING AND TEXT DIMENSIONS SHALL CONFORM WITH THE "STANDARD HIGHWAY SIGNS BOOK" AND DESIGNS PRESCRIBED IN THE MANUAL ON UNIFORM TRAFFIC CONTROL DEVICES (MUTCD) ADOPTED BY THE U.S. DEPARTMENT OF TRANSPORTATION, FEDERAL HIGHWAY ADMINISTRATION (FHWA).

MATERIALS

THE SIGN BASE MATERIAL USED FOR THE SIGNS ON THIS SHEET MAY BE ANY OF THE FOLLOWING, WITH MINIMUM THICKNESS AS NOTED.

FLAT SHEET ALUMINUM	0.125 INCHES
HIGH DENSITY OVERLAYED PLYWOOD	5/8 INCHES

REFLECTORIZATION

ALL LEAD SIGNS (W20-1) ON THIS SHEET SHALL BE ASTM TYPE VIII FLUORESCENT ORANGE SHEETING. ALL OTHER SIGNS ON THIS SHEET SHALL BE ASTM TYPE III RETROREFLECTORIZED SHEETING.

COLORS

THE COLORS SHALL CONFORM WITH THE STANDARD COLORS ADOPTED BY AASHTO AND APPROVED BY THE FHWA. COLORS SHOWN ON THIS SHEET CONSIST OF BLACK TEXT AND BORDER ON A RETROREFLECTORIZED ASTM TYPE III OR TYPE VIII ORANGE BACKGROUND.

INSTALLATION

THE SIGNS SHALL BE ERECTED BEFORE THE START OF ANY WORK AND SHALL BE COVERED UNTIL WORK COMMENCES, DURING PERIODS OF INACTIVITY, OR UPON COMPLETION OF THE WORK. EACH SIGN SHALL BE ERECTED IN A NEAT AND WORKMANLIKE MANNER ON POSTS SET SECURELY IN THE GROUND. THE BOTTOM OF A SIGN SHALL BE AT LEAST 7 FEET ABOVE THE EDGE OF PAVEMENT, AND THE NEAREST EDGE OF A SIGN SHALL BE AT LEAST 6 FEET OUTSIDE THE SHOULDER POINT, 4 FEET OUTSIDE GUARD RAIL, OR 2 FEET OUTSIDE CURBING, OR SIDEWALK. THE INSTALLATION OF SIGNS SHALL BE SUBJECT TO APPROVAL OF THE ENGINEER, IN URBAN AREAS, THE BOTTOM OF THE SIGN SHALL BE AT LEAST 7 FEET ABOVE THE SIDEWALK. SIGNS MAY BE REMOVED UPON COMPLETION OF THE WORK AT THE DISCRETION OF THE ENGINEER.

NOTES CONT.

MAINTENANCE

SIGNS SHALL BE MAINTAINED IN A CLEAN AND LEGIBLE CONDITION SATISFACTORY TO THE ENGINEER. THEY SHALL BE COMPLETELY VISIBLE TO APPROACHING TRAFFIC AT ALL TIMES. THEY SHALL BE KEPT PLUMB AND LEVEL, AND ALWAYS PRESENT A NEAT APPEARANCE. DAMAGED, DEFACED, OR DIRTY SIGNS SHALL BE REPAIRED, CLEANED OR REPLACED AS ORDERED BY THE ENGINEER.

GENERAL

THE COST OF FURNISHING, INSTALLING, MAINTAINING AND REMOVING ALL CONSTRUCTION APPROACH SIGNS WILL BE CONSIDERED INCIDENTAL WORK PERTAINING TO THE PROJECT AS A WHOLE AND SHALL BE INCLUDED IN THE CONTRACT UNIT PRICE BID FOR VARIOUS ITEMS INVOLVED IN THE CONTRACT. DURING ALL PHASES OF CONSTRUCTION THE REQUIREMENTS SET FORTH IN THE "MANUAL ON UNIFORM TRAFFIC CONTROL DEVICES" SHALL BE MET.

SIGN COVERS

SIGN COVERS SHALL CONSIST OF A PANEL PAINTED FLAT BLACK, THE SAME SIZE AS THE SIGN IT COVERS. THE PANEL SHALL BE OF WOOD, PLYWOOD, HARDBOARD OR ANY MATERIAL SATISFACTORY TO THE ENGINEER. NO MATERIAL WILL BE APPROVED THAT WILL DETERIORATE BY EXPOSURE TO THE WEATHER DURING THE PROJECT. MOUNTING OF THE PANEL SHALL BE DONE IN SUCH A WAY AS NOT TO DAMAGE THE SIGN FACE MATERIAL.

CONTRACTORS SHALL COORDINATE THEIR SIGNING ACTIVITIES WITH OTHER CONTRACTORS WITHIN THE PROJECT LIMITS, AS DIRECTED BY THE REGIONAL CONSTRUCTION ENGINEER.

SIGN POSTS

WHERE CONSTRUCTION SIGN INSTALLATIONS ARE NOT PROTECTED BY GUARD RAIL OR OTHER APPROVED TRAFFIC BARRIERS, THE POSTS ON WHICH THE SIGNS ARE MOUNTED SHALL BE YIELDING METAL POSTS AS DESIGNATED IN THE E SERIES OF STANDARD DRAWINGS OR YIELDING WOODEN POSTS IN ACCORDANCE WITH THE FOLLOWING REQUIREMENTS:

WOODEN POSTS ARE ACCEPTABLE FOR USE WITH CONSTRUCTION SIGNS. THESE POSTS SHALL HAVE A UNIFORM CROSS-SECTION AND SHALL BE MADE FROM GRADE 2, AIR-DRIED SOUTHERN YELLOW PINE OR ANOTHER EQUIVALENT SOFTWOOD. AN ACCEPTABLE EQUIVALENT SOFTWOOD SHALL HAVE AN EXTREME FIBER IN BENDING "Fb" DESIGN VALUE NOT TO EXCEED 1400 psi AND HORIZONTAL SHEAR "Fv" DESIGN VALUE NOT TO EXCEED 90 psi SPECIFICATION "DESIGN VALUES FOR WOOD CONSTRUCTION" AND RELATED SUPPLEMENT, LATEST EDITION.

AS ESTABLISHED BY THE NATIONAL FOREST PRODUCTS ASSOCIATION IN THEIR NATIONAL DESIGN, THE FOLLOWING ARE CONSIDERED TO BE ACCEPTABLE WOODEN POSTS:

1. 4" X 4" (ACTUAL DIMENSIONS ARE S4S 3.5" X 3.5")
   A) ACCEPTABLE FOR SINGLE OR DUAL POSTS INSTALLATION WITH NO MODIFICATIONS.

ALL WOODEN POSTS SHALL HAVE AN EMBEDMENT DEPTH OF 4 FEET.
NO CROSS-BRACING OR BACK-BRACING TO KEEP THE POSTS PLUMB WILL BE ALLOWED.
CONCRETE FOUNDATIONS, COLLARS, OR SOIL BEARING PLATES ARE NOT PERMITTED.
CONSTRUCTION SIGNS SHALL BE PLACED ON TWO OR MORE POSTS WHEN ANY OF THE FOLLOWING CONDITIONS GOVERN:

A) THE SIGN WIDTH (HORIZONTAL DIMENSIONS FOR DIAMOND SHAPED SIGNS) EXCEEDS 3 1/2 FEET.
B) THE EXPOSED SIGN AREA OF ANY SINGLE SIGN OR ASSEMBLY EXCEEDS 7 SQ. FEET.
C) THE Sv OF A SINGLE POST IS 64.

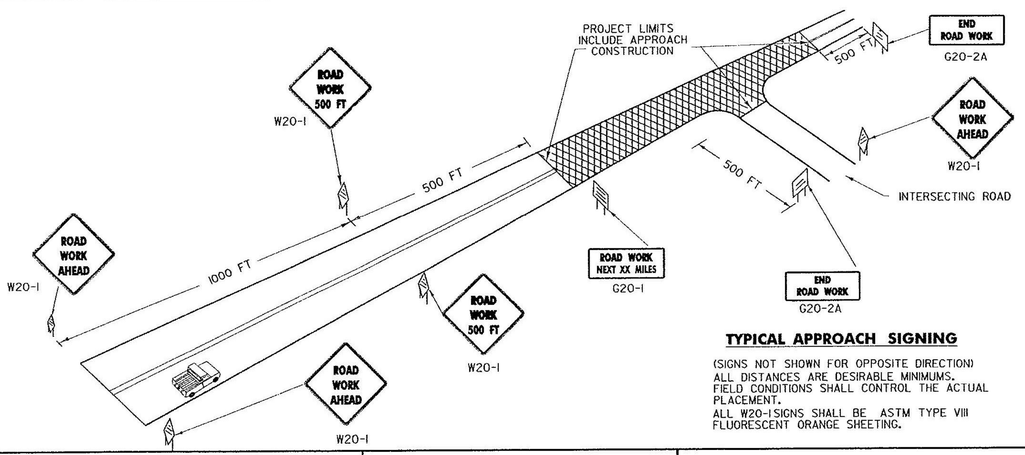

TYPICAL APPROACH SIGNING

(SIGNS NOT SHOWN FOR OPPOSITE DIRECTION)
ALL DISTANCES ARE DESIRABLE MINIMUMS.
FIELD CONDITIONS SHALL CONTROL THE ACTUAL PLACEMENT.
ALL W20-1 SIGNS SHALL BE ASTM TYPE VIII FLUORESCENT ORANGE SHEETING.

OTHER STDS. REQUIRED: E-100A, E-101, E-102

REVISIONS AND CORRECTIONS

MAY 26, 1989 - DATE OF ORIGINAL ISSUE
OCT 21, 1992 - REVISED WOOD POST REQUIREMENTS, ADDED SIGN DETAILS, & REVISED TITLE BLOCK
AUG. 08, 1995 - MINOR NOTE REVISIONS
JAN. 06, 1997 - MINOR NOTE AND DIMENSION REVISIONS
JAN. 2, 2004 - CHANGED REFLECTIVE SHEETING TO ASTM TYPE III OR TYPE VIII

APPROVED

DIRECTOR OF PROGRAM DEVELOPMENT
TRAFFIC OPERATIONS ENGINEER
FEDERAL HIGHWAY ADMINISTRATION

CONSTRUCTION APPROACH SIGNS

VERMONT AGENCY OF TRANSPORTATION

STANDARD E-100

PROJECT RECORD DRAWINGS

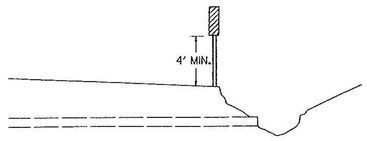

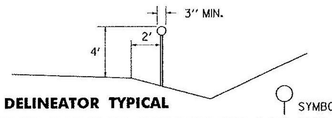

DELINEATOR TYPICAL

SYMBOL

THE STANDARD COLOR FOR DELINEATORS USED ALONG BOTH SIDES OF TWO-WAY STREETS AND HIGHWAYS AND THE RIGHT SIDE OF ONE-WAY STREETS SHALL BE WHITE. DELINEATORS USED ALONG THE LEFT SIDE OF ONE-WAY ROADWAYS SHALL BE YELLOW THEY SHALL HAVE A MINIMUM AREA OF 7 SQUARE INCHES. THEY MAY BE ROUND, SQUARE OR OBLONG, FOR ALTERNATES SEE STD. E-198

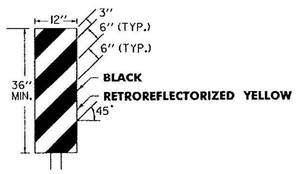

OBJECT MARKER TYPICAL

OBJECTS MARKERS ARE USED TO MARK OBSTRUCTIONS WITHIN OR ADJACENT TO THE ROADWAY. IN SOME CASES THERE MAY NOT BE A PHYSICAL OBJECT INVOLVED, BUT OTHER ROADSIDE CONDITIONS SUCH AS NARROW SHOULDER DROP-OFFS, GORES, D.I. EXCAVATIONS, AND ABRUPT CHANGES IN THE ROADWAY ALIGNMENT MAY MAKE IT UNDESIRABLE FOR A DRIVER TO LEAVE THE ROADWAY. THE INSIDE EDGE OF THE OBJECT MARKER SHALL BE IN LINE WITH THE INNER EDGE OF THE OBSTRUCTION, WHENEVER POSSIBLE.
OBJECT MARKERS SHALL HAVE ALTERNATING BLACK AND RETROREFLECTORIZED YELLOW STRIPES. (SLOPING DOWNWARD IN THE DIRECTION TRAFFIC IS TO PASS).

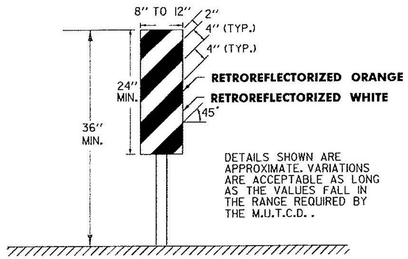

DETAILS SHOWN ARE APPROXIMATE. VARIATIONS ARE ACCEPTABLE AS LONG AS THE VALUES FALL IN THE RANGE REQUIRED BY THE M.U.T.C.D. .

VERTICAL PANEL

VERTICAL PANELS SHALL HAVE ALTERNATING ORANGE AND WHITE RETROREFLECTORIZED STRIPES (SLOPING DOWNWARD IN THE DIRECTION TRAFFIC IS TO PASS). THESE DEVICES MAY BE USED FOR TRAFFIC SEPARATION, CHANNELIZING OR BARRICADING WHERE SPACE IS AT A MINIMUM.

DELINEATOR, VERTICAL PANEL AND OBJECT MARKER DETAILS FOR CONSTRUCTION AREAS WHERE TRAFFIC IS MAINTAINED

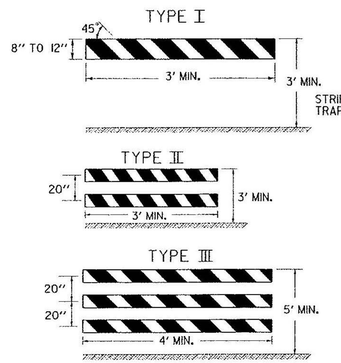

A TYPE III(MODIFIED) BARRICADE SHALL CONSIST OF TYPE II RAILS MOUNTED ON A BREAKAWAY BARRICADE AS SHOWN ON STANDARD SHEET E-107A.

BARRICADE CHARACTERISTICS			
	I	II	III
WIDTH OF RAIL	8" MIN. 12" MAX.	8" MIN. 12" MAX.	8" MIN. 12" MAX.
LENGTH OF RAIL	3' MIN.	3' MIN.	4' MIN.
WIDTH OF STRIPES	6"	6"	6"
HEIGHT	3' MIN.	3' MIN.	5' MIN.
TYPE OF FRAME	SEE E-107A	SEE E-107A	SEE E-107A
FLEXIBILITY	PORTABLE	PORTABLE	PORTABLE
ANGLE OF STRIPE	45°	45°	45°
COLOR OF STRIPES	ORANGE AND WHITE	ORANGE AND WHITE	ORANGE AND WHITE

BARRICADE CHARACTERISTICS

BARRICADES

APPLICATION NOTES

TYPE I BARRICADES SHALL BE USED ON CONVENTIONAL ROADS OR URBAN STREETS AND ARTERIALS TO MARK A SPECIFIC HAZARD.

TYPE II BARRICADES SHALL BE USED ON EXPRESSWAYS AND FREEWAYS, SERVING THE SAME FUNCTIONS AS TYPE I BARRICADES.

TYPE III BARRICADES (SEE STD. E-107A) SHALL ONLY BE USED WHEN A ROAD SECTION OR LANE IS CLOSED TO TRAFFIC AND ARE TO BE ERECTED AT THE POINT OF CLOSURE.

MATERIALS

THE BARRICADES SHOWN ON THIS SHEET SHOULD BE OF LIGHTWEIGHT MATERIAL. IF WOOD IS USED THE FOLLOWING CONDITIONS SHALL APPLY:

1. WOODEN BARRICADES (TYPE I AND II)
   A) SHALL NOT BE USED TO CHANNELIZE OR DELINEATE WORK AREAS WITHIN THE CLEAR ZONE OF ANY HIGHWAY WHERE OPERATING SPEEDS IN EXCESS OF 20 M.P.H. ARE EXPECTED UNLESS INSTALLED FOR PEDESTRIAN CONTROL BEHIND APPROVED POSITIVE BARRIERS.
   B) MAY BE USED WHERE OPERATING SPEEDS OF 20 M.P.H. OR LESS ARE EXPECTED.
2. TYPE III WOODEN BARRICADES SHALL NOT BE USED.

COLORS

THE BARRICADE PANELS SHOWN ON THIS SHEET SHALL HAVE ALTERNATING RETROREFLECTORIZED WHITE AND ORANGE STRIPES. THE ORANGE SHALL CONFORM WITH THE STANDARD COLORS ADOPTED BY AMERICAN ASSOCIATION OF STATE HIGHWAY AND TRANSPORTATION OFFICALS AND APPROVED BY THE US DEPARTMENT OF TRANSPORTATION FEDERAL HIGHWAY ADMINISTRATION. THE BARRICADE COMPONENTS SHALL BE WHITE UNLESS UNPAINTED METAL OR ALUMINUM IS USED.

REFLECTORIZATION

THE RETROREFLECTIVE SHEETING ON BARRICADE PANELS SHALL BE ASTM TYPE III.

LOCATION

THE BARRICADES SHOWN ON THIS SHEET WILL BE LOCATED BY THE RESIDENT ENGINEER IN THE FIELD OR AS SHOWN ON THE PLANS. THE LOCATION OF THE BARRICADES SHALL FOLLOW THE PROCEDURES SET FORTH IN THE ''MANUAL ON UNIFORM TRAFFIC CONTROL DEVICES'', OR AS OTHERWISE NOTED.

MAINTENANCE

BARRICADES SHALL BE MAINTAINED IN CLEAN CONDITION, SATISFACTORY TO THE RESIDENT ENGINEER. THEY SHALL BE COMPLETELY VISIBLE TO THE APPROACHING TRAFFIC AT ALL TIMES. DAMAGED, DEFACED, OR DIRTY BARRICADES SHALL BE REPAIRED, CLEANED, OR REPLACED AS ORDERED BY THE RESIDENT ENGINEER.

ALL SIGN PLACEMENT DISTANCES ARE DESIRABLE SPECIFICATIONS. FIELD CONDITIONS SHALL CONTROL THE ACTUAL PLACEMENT. PROJECT CONSTRUCTION APPROACH SIGNING PLACEMENT SHALL TAKE INTO CONSIDERATION SPACING REQUIREMENTS FOR THE DETOUR SIGN LAYOUT REQUIREMENTS.

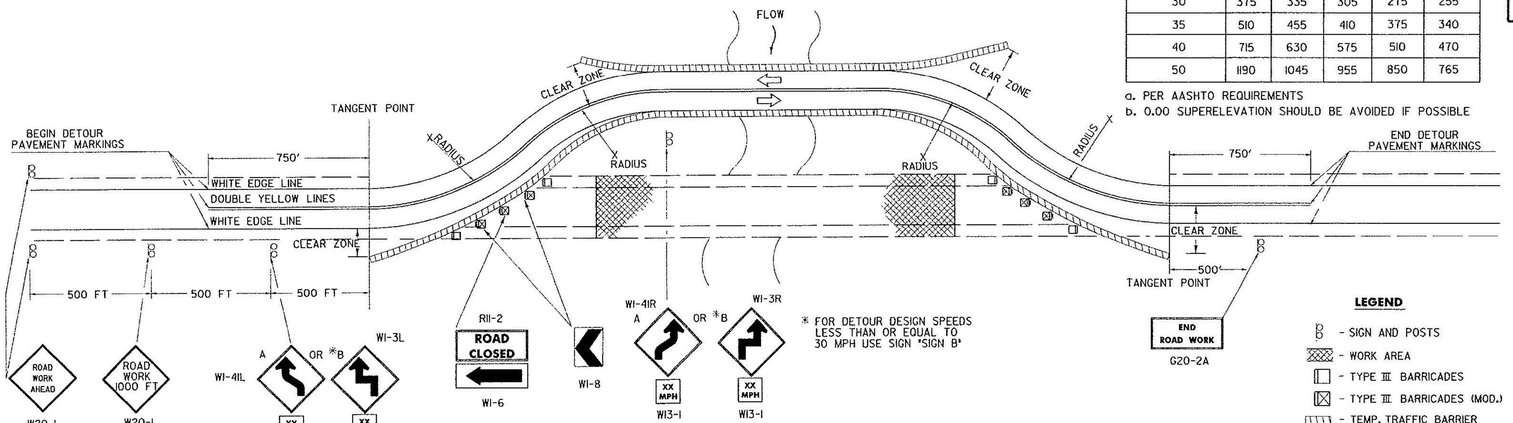

* FOR DETOUR DESIGN SPEEDS LESS THAN OR EQUAL TO 30 MPH USE SIGN "SIGN B"

LEGEND

- SIGN AND POSTS
- WORK AREA
- TYPE III BARRICADES
- TYPE III BARRICADES (MOD.)
- TEMP. TRAFFIC BARRIER
- INDICATES TRAFFIC DIRECTION

TRAFFIC CONTROL PLAN TWO LANE HIGHWAY PAVED DETOUR WITH TEMPORARY TRAFFIC BARRIER

DETOUR DESIGN SPEED (M.P.H.)	MINIMUM RADIUS (FT.)[c] SUPERELEVATION (FT./FT.) 0.00[b]	0.02	0.04	0.06	0.08
20	160	140	130	120	110
25	245	220	200	185	170
30	375	335	305	275	255
35	510	455	410	375	340
40	715	630	575	510	470
50	1190	1045	955	850	765

a. PER AASHTO REQUIREMENTS
b. 0.00 SUPERELEVATION SHOULD BE AVOIDED IF POSSIBLE

DETOUR NOTES

1.) SIGNS AND DELINEATION SHOWN FOR ONE DIRECTION OF TRAFFIC ONLY.
2.) THE CONTRACTOR IS RESPONSIBLE FOR PAVEMENT MARKING AND SHALL REMOVE ANY CONFLICTING OR CONFUSING EXISTING MARKINGS.
3.) ADDITIONAL SIGNING MAY BE REQUIRED AT THE DISCRETION OF THE RESIDENT ENGINEER.
4.) UNPAVED DETOURS REQUIRE PAVEMENT MARKINGS FOR TRANSITIONS FROM EXISTING PAVEMENT.
5.) THE NUMBER OF CHANNELIZING DEVICES, BARRICADES AND OTHER TRAFFIC CONTROL DEVICES SHOWN ON THIS SHEET ARE FOR ILLUSTRATIVE PURPOSES ONLY. THE ACTUAL NUMBER REQUIRED SHALL BE DETERMINED BASED ON INDIVIDUAL DETOUR CONDITIONS (TAPERS, SPEED LIMITS, LENGTH OF DETOUR CURVE, ETC.).
6.) AASHTO CLEAR ZONE REQUIREMENTS SHOULD BE MET. IF NOT THEN AN APPROVED ENERGY ABSORPTION ATTENUATOR (SUITABLE FOR THE TEMPORARY TRAFFIC BARRIER USED AND FOR THE DESIGN SPEED) SHALL BE INSTALLED PER THE CURRENT AASHTO ROADSIDE DESIGN GUIDE.
7.) THE DETOUR DESIGN SPEED SHOULD BE NO LESS THAN 10 M.P.H. BELOW THE POSTED SPEED LIMIT, UNLESS PHYSICAL RESTRICTIONS PREVENT THIS.
8.) SEE STANDARD SHEETS E-100, E-101 AND E-102 FOR SIGN DETAIL AND MATERIAL REQUIREMENTS.
9.) IF THE USE OF TEMPORARY TRAFFIC BARRIER IS NOT REQUIRED, THEN REFLECTORIZED PLASTIC DRUMS SHALL BE USED.

OTHER STDS. REQUIRED: E-100, E-101, E-102, E-102a, E-107a, E-198

REVISIONS AND CORRECTIONS
SEPT. 10, 1987 - DATE OF ORIGINAL ISSUE
APRIL 29, 1988 - FHWA REVIEW COMMENTS
SEPT. 20, 1993 - NEW RADIUS CHART, BARRICADE ALIGNMENT AND USE OF TEMPORARY TRAFFIC BARRIER
AUG. 08, 1995 - REVISED SIGNING PER MUTCD
JUNE 30, 2003 - CHANGED REFLECTIVE SHEETING TO TYPE III

APPROVED
DIRECTOR OF PROGRAM DEVELOPMENT
TRAFFIC OPERATIONS ENGINEER
FEDERAL HIGHWAY ADMINISTRATION

DELINEATION, BARRICADES AND DETOURS FOR CONSTRUCTION AREAS

VERMONT AGENCY OF TRANSPORTATION

STANDARD E-107

PROJECT RECORD DRAWINGS

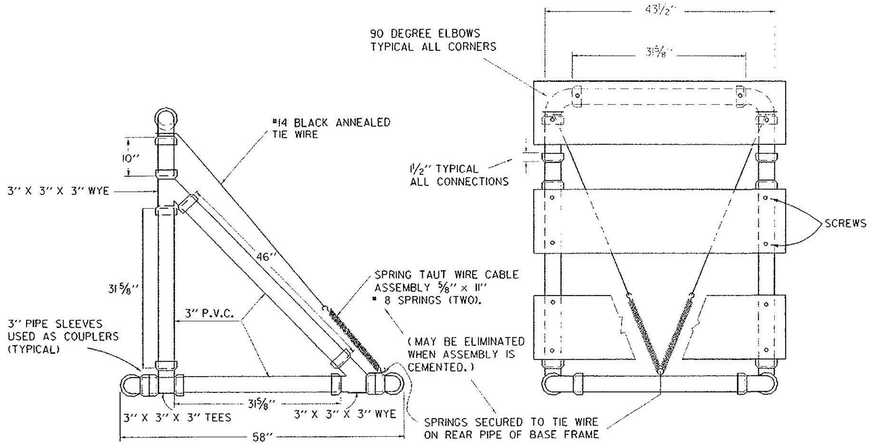

SIDE VIEW
TYPE III BARRICADE

FRONT VIEW
TYPE III BARRICADE

MATERIALS FOR TYPE I AND II BARRICADES

20' - 1" PVC
4 - 1" PVC 90° ELBOWS
30" -½" ID THINWALL PVC CONDUIT
36" -¼" STEEL ROD
4 - 1" WASHERS
24" - LIGHT DUTY CHAIN
½" - #14 PAN HEAD METAL SCREWS (AS REQUIRED)
2 -¾" COTTER PINS
2 OR 4 - 8" OR 12" X 36" X 0.025 "
BARRICADE RAILS (AS REQUIRED)

MATERIALS FOR TYPE III BARRICADES

30 LF - 3" I.D. PVC PIPE
6 - 3" 90° ELBOWS
2 - 3" TEES
4 - 3" WYES
3 - 8" OR 12" X 48" X 0.025"
BARRICADE RAILS
2 - 5/8" X 11" #8 SPRING
(IF ASSEMBLY IS NOT CEMENTED)
12 - 1" #14 PAN HEAD METAL SCREWS
15 LF - #14 BALCK ANNEALED TIE WIRE
(IF ASSEMBLY IS NOT CEMENTED)

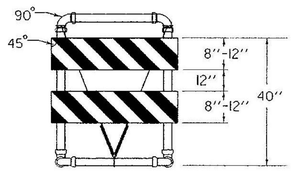

TYPE III (MODIFIED) BARRICADE
(STRIPING IS SHOWN WITH TRAFFIC PASSING TO THE RIGHT).

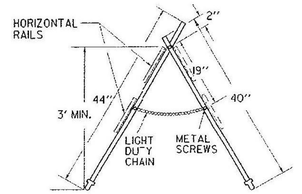

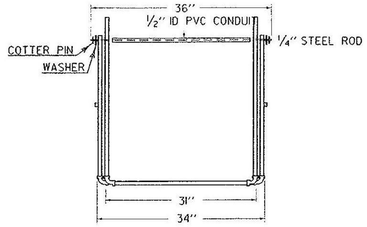

TYPE I AND TYPE II BARRICADE

MATERIALS

THE PIPE, WYES, TEES AND ELBOWS USED TO CONSTRUCT BARRICADES SHALL CONFORM TO THE REQUIREMENTS OF ASTM DESIGNATION D 2241 FOR P.V.C. 1120 OR 1220 SDR-21, PRESSURE RATING 200 PSI. THE WYES, TEES AND ELBOWS SHALL CONFORM TO THE REQUIREMENTS OF ASTM DESIGNATION D 2466, TYPE II, GRADE I. ALL JOINTS SHALL BE SLIP-FIT AND MAY BE LIGHTLY CEMENTED. THE BARRICADE RAILS SHALL BE FABRICATED FROM 0.025" ANODIZED, ALUMINUM AND SHALL HAVE REFLECTORIZED ALTERNATING ORANGE AND WHITE STRIPES (SLOPING DOWNWARD AT AN ANGLE OF 45 DEGREES IN THE DIRECTION TRAFFIC IS TO PASS).

MAINTENANCE

BARRICADES SHALL BE MAINTAINED IN CLEAN AND LEGIBLE CONDITIONS SATISFACTORY TO THE ENGINEER. THEY SHALL BE COMPLETELY VISIBLE TO APPROACHING TRAFFIC AT ALL TIMES. DAMAGED, DEFACED, OR DIRTY BARRICADES SHALL BE REPAIRED, CLEANED OR REPLACED AS ORDERED BY THE ENGINEER. THE P.V.C. PIPE AND FITTINGS SHALL BE WHITE IN COLOR. AT LEAST TWO (2) HOLES SHALL BE DRILLED (⅜" DIAM.) IN EACH SECTION OF PIPE AND FITTINGS IF THE ASSEMBLY IS NOT CEMENTED.

BARRICADES SHALL BE STABILIZED WITH SAND BAGS OF MINIMUM WEIGHT WHICH WILL NOT CONSTITUTE A HAZARD IF THE BARRICADE IS HIT. THESE SHALL BE PLACED ONLY ON THE FRONT AND REAR PIPES OF THE BASE FRAME OF THE BARRICADE. SAND BAG STABILIZERS SHALL BE SO PLACED AS NOT TO BE A HAZARD TO VEHICLES PASSING ON EITHER SIDE. IF BARRICADE REPLACEMENT COSTS CAN BE CONSIDERED NEGLIGIBLE, GLUED JOINTS MAY PROVIDE ADDITIONAL STABILITY TO THE INSTALLATION.

TYPE I BARRICADES SHALL UTILIZE ONE HORIZONTAL RAIL IN EACH DIRECTION.

TYPE II BARRICADES SHALL BE A TYPE I BARRICADE WITH AN ADDITIONAL HORIZONTAL RAIL MOUNTED BELOW THE OTHER IN EACH DIRECTION.

TYPE III BARRICADES (MODIFIED) SHALL CONSIST OF THE BREAKAWAY 3" PVC DESIGN SHOWN ON THIS SHEET WITH THE TWO RAIL LAYOUT DETAILED ABOVE LEFT.

SEE STD E-107 FOR ADDITIONAL INFORMATION.

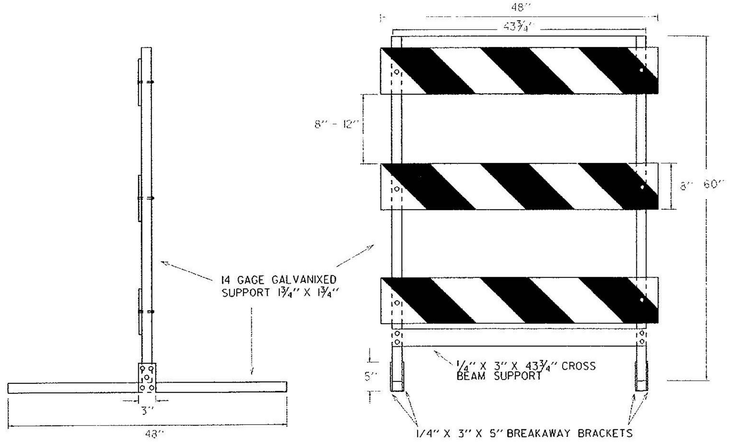

SIDE AND FRONT VIEW OF TYPE III METAL BARRICADE

MATERIALS FOR METAL TYPE III BARRICADES

PANELS (3):
8' X 48" GALVANIZED STEEL...COVERED
1 OR 2 SIDES WITH WHITE/ORANGE, DIAGONALLY
STRIPED REFLECTIVE SHEETING

VERTICAL SUPPORTS (2): 14 GAGE GALVANIZED
TUBING 1 3/4" X 1 3/4" X 60"
HORIZONTAL SUPPORTS (2): 14 GAGE GALVANIZED
TUBING 1 3/4" X 1 3/4" X 48"
CROSS BEAM SUPPORT (1): COLD GALVANIZED
STEEL 1/4" X 3" X 43 3/4"
BREAKAWAY BRACKETS (4): COLD-GALVANIZED
STEEL 1/4" X 3" X 5"

FASTENERS:
6 - SHEAR BOLTS WITH LOCK NUTS 1/4"D X 2 3/4"
4 - FULCRUM BOLTS WITH LOCK NUTS 3/8"D X 2 3/4"
4 - FASTENER BOLTS WITH LOCK NUTS 3/8"D X 2 3/4"
6 - PANEL BOLTS WITH LOCK NUTS AND WASHERS
1/4"D X 2"
ALL FASTENERS GALVANIZED STEEL.
ALL BOLTS HEX HEAD.

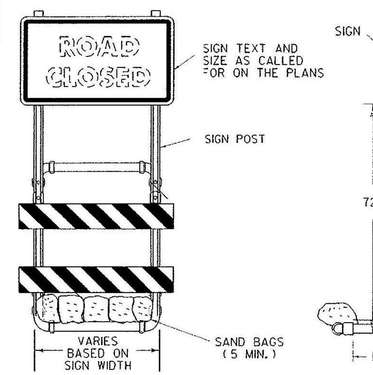

SIGN MOUNTING ON
TYPE III BARRICADE (MODIFIED)

NOTES:

1) REFER TO STANDARD TYPE III BARRICADE (ABOVE LEFT)
2) ALL BARRICADE JOINTS SHALL BE GLUED.
3) FIVE SAND BAGS ARE REQUIRED BOTH FRONT AND BACK, 50 LB. MINIMUM EACH.

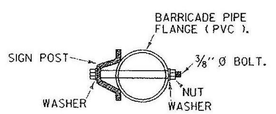

CONNECTION DETAIL

OTHER STDS. REQUIRED: E-107

REVISIONS AND CORRECTIONS

SEPT. 10, 1987 - ORIGINAL APPROVAL DATE
SEPT. 20, 1993 - REVISED NOTES AND TYPE III (MOD.) BARRICADE DETAIL
AUG. 08, 1995 - ADDED METAL TYPE III BARRICADE
JUN. 08, 2009 - MINOR CORRECTIONS

APPROVED

Kevin A. Marshia
HIGHWAY, SAFETY & DESIGN ENGINEER

Richard Tetreault
DIRECTOR OF PROGRAM DEVELOPMENT

Mark D. Richter
FEDERAL HIGHWAY ADMINISTRATION

BREAKAWAY BARRICADE DETAILS

/traf/std/stdel07a.agn : stdel07c.i

VERMONT AGENCY OF TRANSPORTATION

STANDARD E-107 A

PROJECT RECORD DRAWINGS

GUARDRAIL DEFLECTION CHART

(PER AASHTO - ROADSIDE DESIGN GUIDE - LATEST EDITION)

TYPE		GR POST SPACING	DEFLECTION
THREE CABLE	W/STEEL POSTS	16' - 0"	11' - 6"
	W/WOODEN POSTS	12' - 6"	11' - 6"
W-BEAM	W/STRONG POST	6' - 3"	3'
BOX BEAM		6' - 0"	5'
THRIE BEAM	W/STRONG POST	6' - 3"	2'

THIS CHART LISTS THE THEORETICAL MAXIMUM DEFLECTION DISTANCE, UPON IMPACT, OF DIFFERENT TYPES OF GUARDRAIL AND VARIOUS POST SPACINGS.

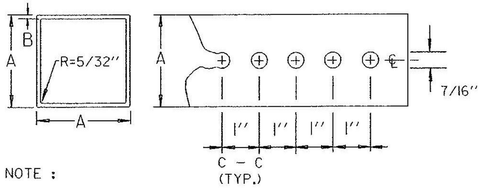

NOTE :

THE POSTS SHALL BE CAREFULLY FORMED OF STEEL WITH A MINIMUM YIELD OF 55,000 PSI, INTO A SIZE AND SHAPE WITH CORNERS INDUCTION WELDED IN SUCH A MANNER THAT NEITHER FLASH NOR WELD SHALL INTERFERE WITH THE TELESCOPING PROPERTIES, NOR DAMAGE THE GALVANIZING.

- THE WALL THICKNESS TOLERANCES SHALL BE +.005" AND -.010" FOR THE 12 GAUGE.
- THE WALL THICKNESS TOLERANCES SHALL BE +.002" AND -.008" FOR THE 14 GAUGE.

DIMENSION DETAILS AND POST SELECTION CHART

POST SELECTION CHART

SIGN AREA (FT^2) X H (FT) ≤ SV (SELECTION VALUE)

POST SIZE	DIMENSIONS			SECTION MODULUS IN^3	ONE POST Sv	TWO POST Sv	THREE POST Sv	NUMBER PERMITTED IN 8' PATH
LBS/FT.	A	*B	GAUGE					
1.88	1-3/4"	.083	14	0.230	46	92	138	TWO
2.42	2"	.083	12	0.380	77	154	231	TWO
3.35	2-1/2"	.105	12	0.642	130	260	390	ONE

DESIGN CRITERIA:

WIND SPEED = 70 MPH (10 -YEAR MEAN RECURRENCE INTERVAL)
WIND PRESSURE = 19 PSF
STEEL MINIMUM YIELD = 55,000 PSI
ALLOWABLE STRESS = (1.4) 0.60 FY

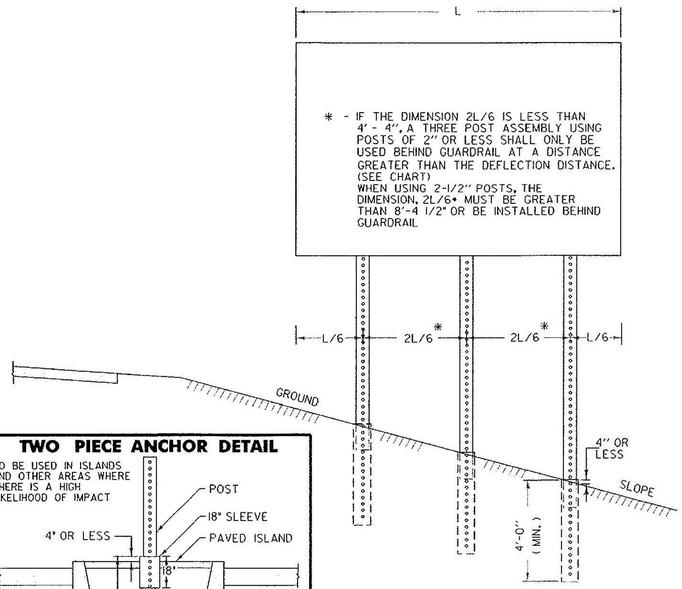

TWO PIECE ANCHOR DETAIL

TOP VIEW OF ANCHOR, POST AND BOLT

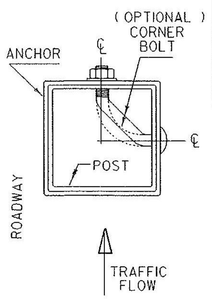

MULTI-POST INSTALLATIONS

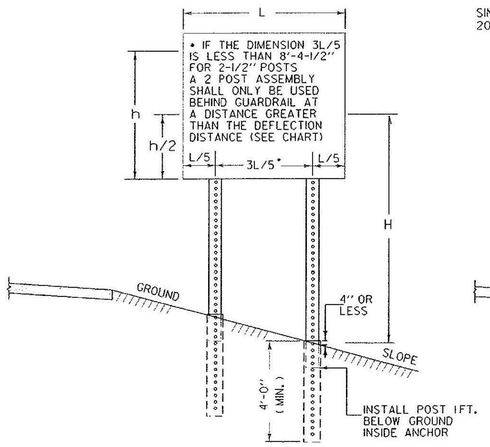

POST SPACING DETAILS

GENERAL NOTES

CONSTRUCTION METHODS - POSTS MAY BE DRIVEN OR SET IN A DUG HOLE AND BACKFILLED. IF DRIVEN, A DRIVING CAP SHALL BE USED. THE DUG HOLE INSTALLATION SHALL BE USED IN AREAS OF POOR SOIL CONDITIONS OR AS DIRECTED BY THE RESIDENT ENGINEER. BACKFILL SHALL BE COMPACTED AS DIRECTED BY THE RESIDENT ENGINEER.

SIGN CLEARANCES - HORIZONTAL AND VERTICAL SIGN CLEARANCES SHALL BE SHOWN ON THE PLANS OR THE APPROPRIATE STD. SHEETS.

SINGLE POST INSTALLATIONS SHALL BE LIMITED TO A SIGN AREA OF 20 SQ. FT. OR LESS

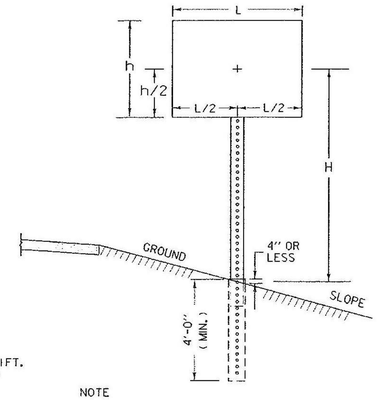

NOTE

WHEN USING SQUARE STEEL POSTS ON STEEP SLOPES (1ON 2 OR STEEPER) ADD ONE FOOT EMBEDMENT FOR GREATER STABILITY.

OPTIONAL CORNER BOLT DETAILS

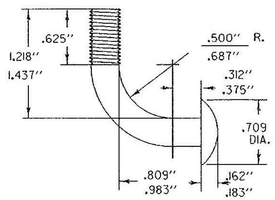

FOR 1-3/4" TO 2-1/2" SQ. TUBE BOLT SIZE VARIES WITH POST SIZE

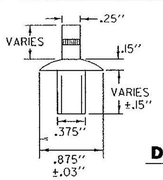

THIS DRIVE RIVET MAY BE SUBSTITUTED FOR EITHER OF THE CORNER BOLTS SHOWN ABOVE OR TO THE RIGHT.

DRIVE RIVET

DOUBLE DIMENSIONS REFER TO TWO ALTERNATE BOLT SIZES.

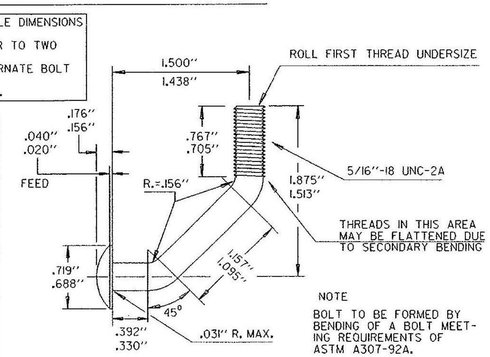

NOTE

BOLT TO BE FORMED BY BENDING OF A BOLT MEETING REQUIREMENTS OF ASTM A307-92A.

• DIMENSIONS VARY AS NEEDED FOR POST SIZE USED

CONNECTION DETAIL

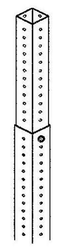

POST IS TO BE INSERTED INTO ANCHOR ONE FOOT BELOW GROUND LEVEL. ANCHOR IS TO BE 4'-0" MINIMUM LENGTH WITH NO MORE THAN 4" ABOVE GROUND. ANCHOR IS ONE SIZE (1/4") GREATER THAN THE POST AND ALL ANCHORS ARE TO BE 12 GAGE, EXCEPT ANCHORS FOR 2-1/2" POSTS ARE TO BE 3" AND 7 GAGE. CONNECTION IS TO BE MADE USING THE BOLT PROVIDED WITH THE SIGN SYSTEM (SEE DETAILS LEFT). AT THE TOP HOLE IN THE ANCHOR (APPROXIMATELY 3-1/2" ABOVE GROUND). THREE INCH ANCHORS WHICH DO NOT HAVE HOLES ON 1" CENTERS WILL REQUIRE DRILLING OF 7/16" HOLES FOR CONNECTIONS.

(SEE DETAIL LEFT FOR BOLT PLACEMENT)

OTHER STDS. REQUIRED E-120, E-160

REVISIONS AND CORRECTIONS

APR. 27, 1994 - ORIGINAL APPROVAL DATE
JUL. 21, 1994 - REVISED POST GAUGES
AUG. 18, 1995 - ADDED TWO PIECE ANCHOR DETAIL
MAR. 26, 1996 - REVISED POST SELECTION CHART
MAY 20, 1999 - REPLACE LOST ORIGINAL
JUN. 08, 2009 - POST SELECTION REVISIONS

APPROVED

Kevin S. Marshia
HIGHWAY, SAFETY & DESIGN ENGINEER

Richard Peterson
DIRECTOR OF PROGRAM DEVELOPMENT

Mark D. Richter
FEDERAL HIGHWAY ADMINISTRATION

SQUARE STEEL SIGN POST

/-rof/english/std/e164.dgn

VERMONT AGENCY OF TRANSPORTATION

STANDARD E-164

PROJECT RECORD DRAWINGS

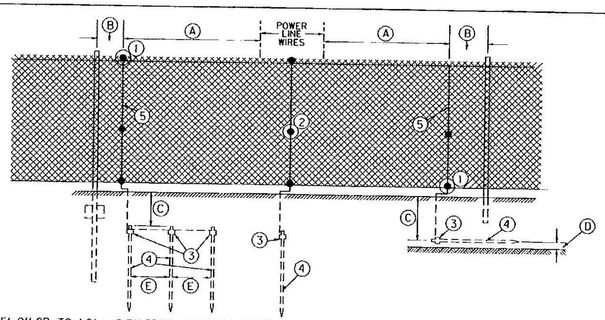

(A) 25'-0" OR TO 10' ± 0.5" FROM NEAREST FENCE POST (AT RIGHT ANGLE TO POWER LINE)
(B) MAXIMUM DISTANCE 10' (± 0.5")
(C) MINIMUM DISTANCE 10' (± 10")
(D) 2.0" (± 0.5")
(E) MINIMUM DISTANCE 6.0
(1) CONNECTOR, (2) CONNECTOR, } SUITABLE FOR WIRE GAUGES UTILIZED AND FOR DISSIMILAR METALS
(3) GROUND ROD CLAMP
(4) COPPER CLAD STEEL CORE GROUND ROD 5/8" X 8'-0"
(5) CONDUCTOR NO. 6 AWG COPPER SOFT DRAWN OR NO. 4 AWG ALUMINUM

INSTALLATION METHOD OF PROTECTIVE GROUNDING AT POWER LINE CROSSINGS

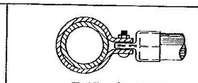

END CLAMP

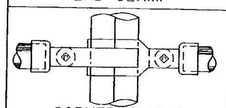

CORNER CLAMP
(ADJUSTABLE)

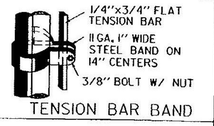

TENSION BAR BAND

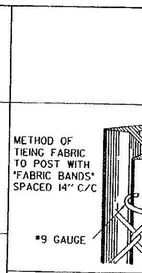

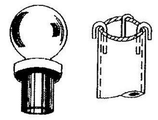

FOR END, CORNER, PULL AND GATE POSTS
BALL TOP

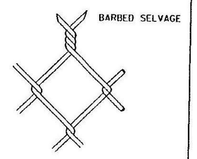

CHAIN LINK FABRIC
#9 GAUGE STEEL WIRE
2" MESH

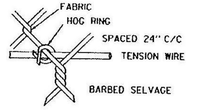

HOG RING FASTENER

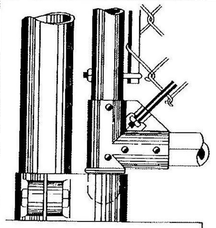

BOTTOM CORNER & HINGE FOR DRIVE GATE

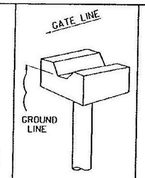

CENTER STOP FOR TWO PANEL GATES



FORK LATCH

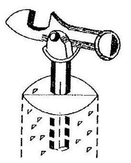

HOLDBACK TO HOLD A DRIVE GATE OPEN

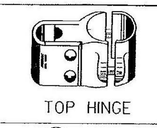

TOP HINGE

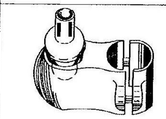

WALK GATE BOTTOM HINGE

GENERAL NOTES (ZINC-COATED STEEL FABRIC / ALUMINUM COATED STEEL FABRIC / VINYL COATED FABRIC)

HEIGHT - AS NOTED ON PLANS

FABRIC - CHAIN LINK, # 9 GAUGE WIRE, WOVEN IN A 2" MESH. TOP AND BOTTOM SELVAGES TO BE BARBED. THE BOTTOM SELVAGE TO BE 2" ABOVE THE GROUND LINE. THE TOP SELVAGE TO BE 1" ABOVE THE TENSION WIRE. WHERE FENCE IS 4 FT. THE TOP EDGE SHALL BE KNUCKLED.

LINE POSTS - 2"x2 ½" "H" COLUMN, WEIGHT 4.1 LBS. PER FOOT OR 2 3/8" O.D. PIPE, WEIGHT 3.65 LBS. PER FOOT OR APPROVED EQUAL FOR FENCE 6'-0" AND OVER IN HEIGHT. FOR FENCE LESS THAN 6'-0" IN HEIGHT, "H" COLUMNS WEIGHING 2.70 LBS. PER FOOT SHALL BE USED.

TERMINAL POSTS - END, CORNER, AND PULL POSTS, SHALL BE 2 7/8" O.D. PIPE, WEIGHT 5.79 LBS. PER FOOT FOR FENCE 6'-0" AND OVER IN HEIGHT. FOR FENCE LESS THAN 6'-0" IN HEIGHT, 2 3/8" O.D. PIPE, WEIGHING 3.65 LBS. PER FOOT, SHALL BE USED.

POST SPACING - POSTS SHALL BE SPACED EQUIDISTANT ON A MAXIMUM OF 10 FEET CENTER TO CENTER EXCEPT GATE POSTS, WHICH SHALL BE SPACED ACCORDING TO THE REQUIRED GATE OPENING.

POST FOOTINGS - ALL POSTS SHALL BE SET TO A DEPTH OF 2 FEET 10 INCHES IN A 10" DIAMETER CYLINDRICAL SHAPED HOLE 3'-6", FILLED WITH CONCRETE.

ALL FITTINGS AND HARDWARE SHALL BE SHOWN ON THIS SHEET OR EQUAL.

THE EXPOSED SURFACE OF ALL TOPS OF FOOTINGS TO BE SLOPED TO SHED WATER AND PROVIDE A NEAT APPEARANCE WHEN COMPLETED.

FABRIC TIES - FABRIC TO BE FASTENED TO POSTS AND GATE FRAMES WITH # 9 GAUGE WIRE.

TRUSS RODS - SHALL BE 3/8" DIAMETER DIAGONAL BARS WITH TURNBUCKLE.

BRACE RODS - SHALL BE 1⅝" O.D. PIPE.

TENSION BARS - SHALL BE FLAT 1/4" x 5/4" BARS WITH SQUARE EDGES.

TENSION WIRE - SHALL BE # 9 GAUGE WIRE ATTACHED 1" BELOW TOP SELVAGE AND 2" ABOVE BOTTOM SELVAGE OF FABRIC BY MEANS OF HOG RINGS ON 24" CENTERS.

GATES - GATE FRAMES SHALL BE 1.90" O.D. PIPE ASSEMBLED BY WELDING, RIVETING OR BOLTING AND TO BE FURNISHED WITH ALL THE NECESSARY FITTINGS OVER 6'-0".

GATE FRAMES SHALL BE 1.66 " O.D. PIPE ASSEMBLED BY WELDING, RIVETING OR BOLTING AND TO BE FURNISHED WITH ALL THE NECESSARY FITTINGS 6'-0" AND LESS.

END SECTION ASSEMBLY - TO BE ERECTED ON A MAXIMUM OF 200 FEET CENTER TO CENTER.

THE WEIGHT TOLERANCE IS 5 PERCENT ABOVE AND 5 PERCENT BELOW. THE TUBULAR SIZES ARE NOMINAL.

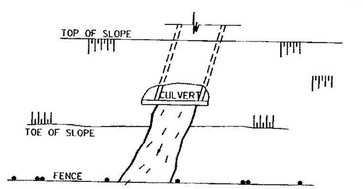

PLAN

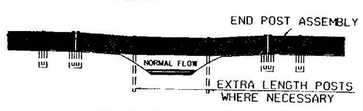

CROSSING AT STREAMS

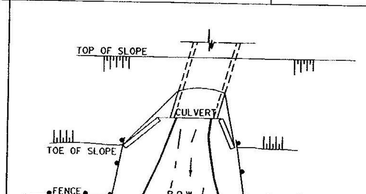

PLAN

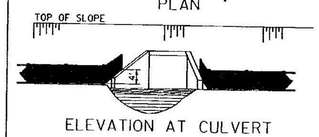

ELEVATION AT CULVERT

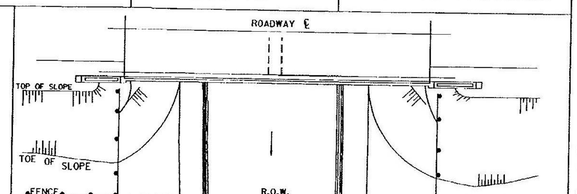

PLAN

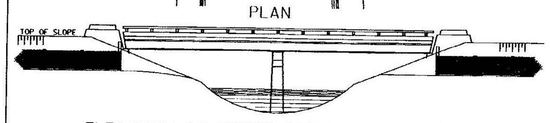

ELEVATION AT BRIDGE WITH PARAPET WALLS

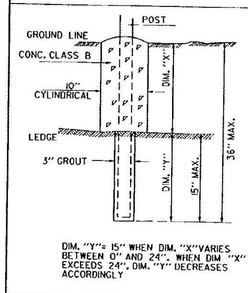

DIM. "Y" = 15" WHEN DIM. "X" VARIES BETWEEN 0" AND 24". WHEN DIM "X" EXCEEDS 24", DIM. "Y" DECREASES ACCORDINGLY

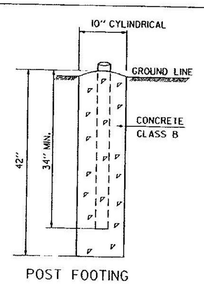

POST FOOTING

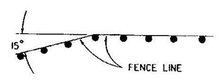

WHERE FENCE LINE HAS A CHANGE OF DIRECTION OF 15 DEGREES OR MORE, CORNER POSTS WITH BRACING SHALL BE ERECTED. WHERE ANGLE IN FENCE LINE IS LESS THAN 15 DEGREES AND EXISTING CONDITIONS REQUIRE TERMINAL POSTS, THEY SHALL BE ERECTED AS DIRECTED BY THE ENGINEER

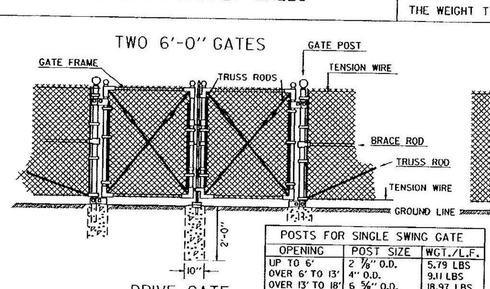

DRIVE GATE

POSTS FOR SINGLE SWING GATE		
OPENING	POST SIZE	WGT./L.F.
UP TO 6'	2 7/8" O.D.	5.79 LBS
OVER 6' TO 13'	4" O.D.	9.11 LBS
OVER 13' TO 18'	6 5/8" O.D.	18.97 LBS
OVER 18'	8 5/8" O.D.	24.70 LBS

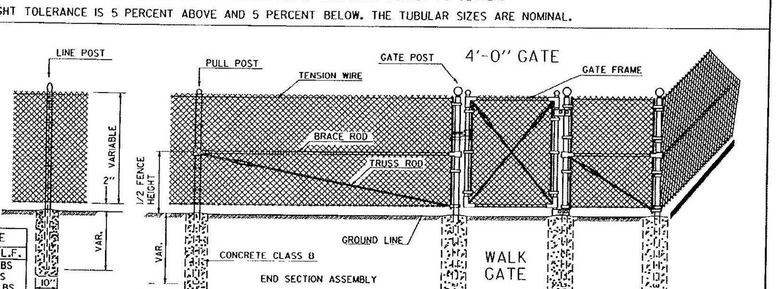

END SECTION ASSEMBLY

WALK GATE

REVISIONS AND CORRECTIONS

DEC. 6, 1971- ORIGINAL APPROVAL DATE
JULY 28, 1975- VINYL COATED FABRIC ADDED
FEB. 1, 1979- CHANGE TOP RAIL TO TENSION WIRE
JUNE 1, 1994 - REISSUED, WITHOUT CHANGE, UNDER NEW SIGNATURES.

APPROVED

APPROVED FOR THIS PROJECT AND/OR DESIGN IMPLEMENTATION. FHWA FINAL APPROVAL PENDING.

Gordon D. MacMillan, P.E.
DIRECTOR OF ENGINEERING

Robert M. Murphy, P.E.
DESIGN ENGINEER

CHAIN LINK FENCE (TYPE 1)
DRIVE GATE FOR CHAIN-LINK FENCE (TYPE 1)
WALK GATE FOR CHAIN-LINK FENCE (TYPE 1)

VERMONT AGENCY OF TRANSPORTATION

STANDARD
F-2

PROJECT RECORD DRAWINGS

Record Drawings
ATTACHMENT A:
Construction Survey
Record Plan

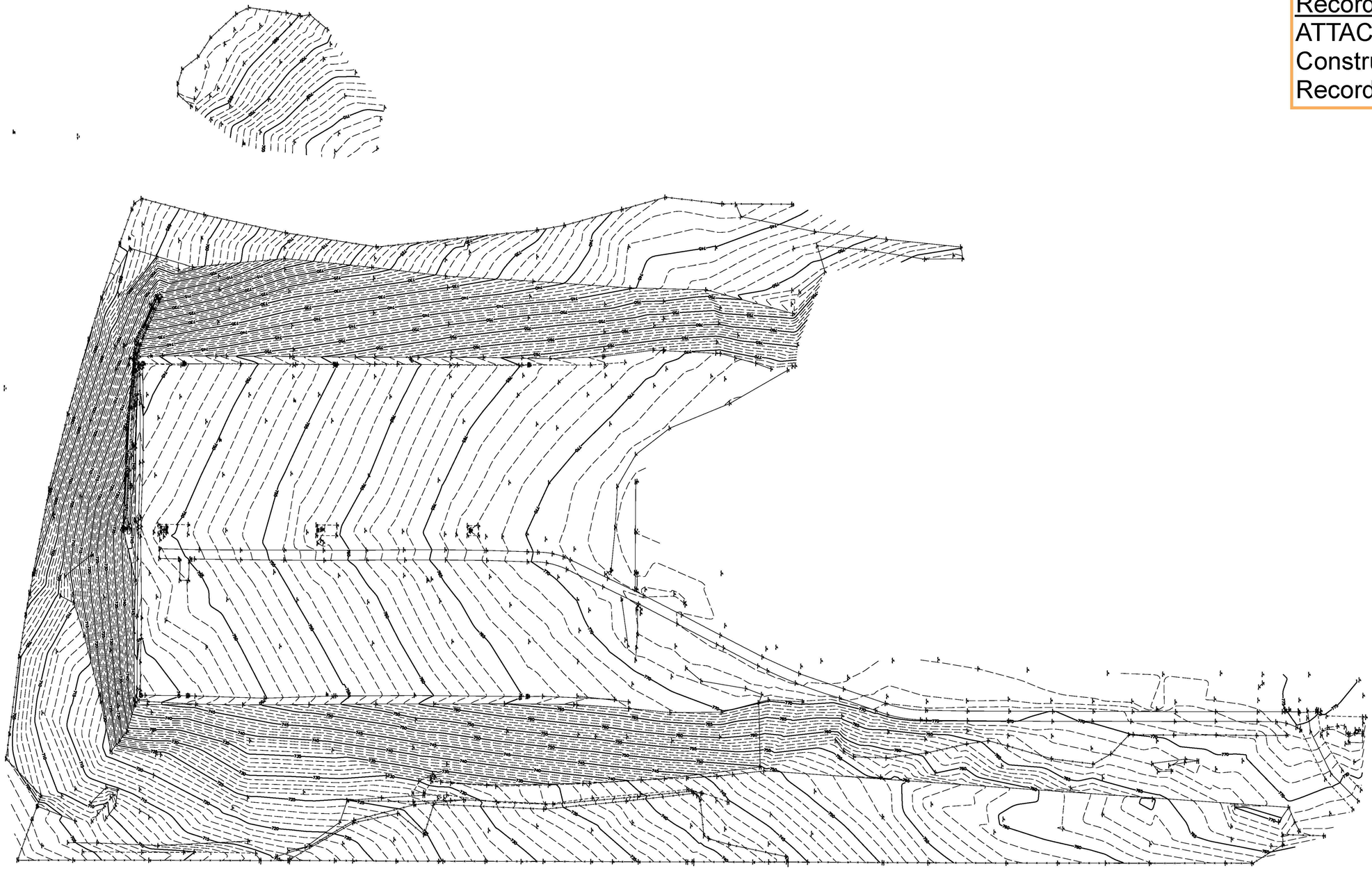

0 60 120
SCALE IN FEET

RUTLAND SOUTHERN VERMONT REGIONAL AIRPORT
RUNWAY 19 SAFETY AREA IMPROVEMENTS , PHASE II

PROJECT NUMBER: AV14-8018-300
FILE NAME: 322161-2014-12-24.DGN
PROJECT LEADER: DAVE CONGER

PLOT DATE: 6/12/2015
DRAWN BY: R. OTIS
CHECKED BY: G. STOCKMAN
SHEET 1 OF 1

PROJECT RECORD DRAWINGS