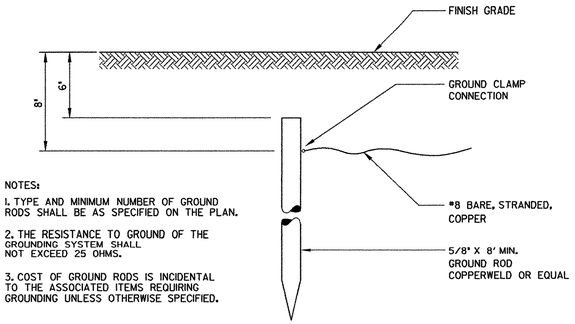

NOTES:

1. TYPE AND MINIMUM NUMBER OF GROUND RODS SHALL BE AS SPECIFIED ON THE PLAN.
2. THE RESISTANCE TO GROUND OF THE GROUNDING SYSTEM SHALL NOT EXCEED 25 OHMS.
3. COST OF GROUND RODS IS INCIDENTAL TO THE ASSOCIATED ITEMS REQUIRING GROUNDING UNLESS OTHERWISE SPECIFIED.

NOTE:

1. SEE SHEETS 12 AND 13 FOR LOCATION.

GROUND ROD INSTALLATION DETAIL (1/7)

NOT TO SCALE

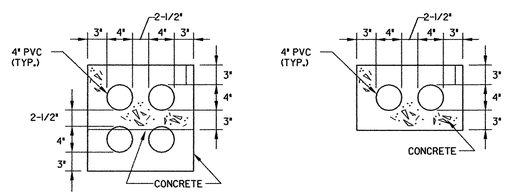

NOTES:

1. WHERE WIDER DUCTS ARE INDICATED, THE DUCT SHALL BE EXPANDED LATERALLY CONFORMING TO THE ABOVE SPACING REQUIREMENTS.
2. SEE VTrans STD. AP-3 FOR ADDITIONAL INFORMATION.
3. SEE SHEETS 12 AND 13 FOR LOCATION.

ELECTRICAL DUCT & MARKER DETAIL (2/7)

NOT TO SCALE

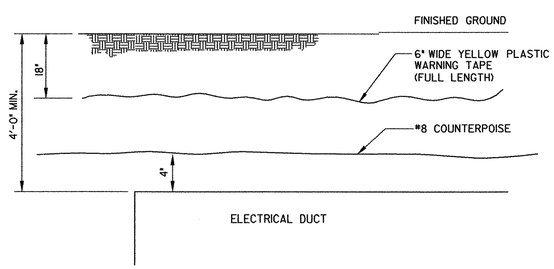

NOTE:

1. SEE SHEETS 12 AND 13 FOR LOCATION.

ELECTRICAL DUCT & MARKER INSTALLATION DETAIL (3/7)

NOT TO SCALE

NOTE:

1. THICKNESS AND REINFORCING OF MANHOLE TOP, WALLS, AND FLOOR TO ACCOMMODATE H-20 LOADING.

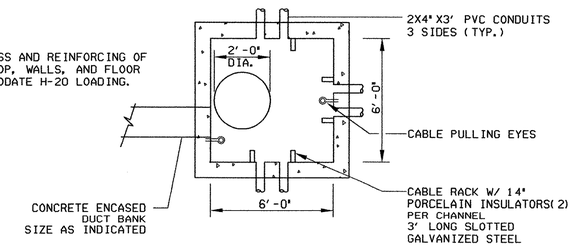

PLAN VIEW

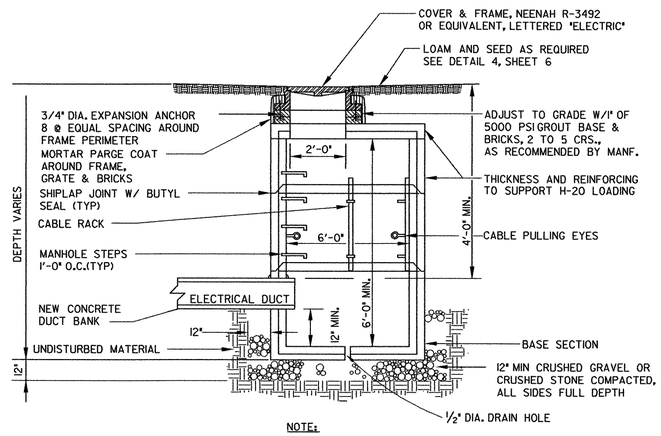

NOTE:

1. SEE SHEETS 12 AND 13 FOR LOCATION.

PRECAST ELECTRICAL MANHOLE DETAIL (4/7)

NOT TO SCALE

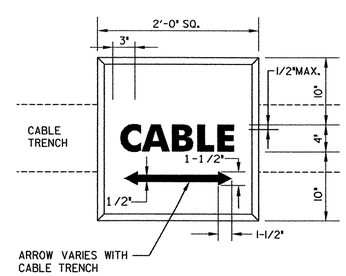

MARKER NOTES:

1. HAND LETTERING NOT ALLOWED ON MARKERS. LETTERING IS TO BE IMPRESSED.
2. ARROW ON CABLE MARKER TO INDICATE DIRECTION OF CABLES.(WHERE APPICABLE)
3. NO SEPARATE PAYMENT WILL BE MADE FOR ANY TYPE OF MARKER.
4. ALL CONCRETE MARKERS WILL BE AT LEAST 4" IN THICKNESS.
5. SEE SPECIFICATIONS FOR LOCATION

CABLE MARKER (5/7)

NOT TO SCALE

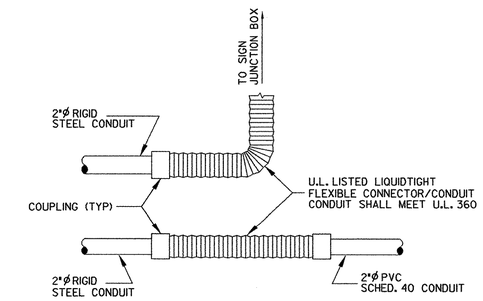

NOTE:

1. SEE SHEET 8 FOR LOCATION.
2. METAL COUPLING TO RECIEVE A COATING OF ASPHALTIC TAR PRIOR TO BACKFILL.

FLEXIBLE CONNECTOR /CONDUIT (6/7)

NOT TO SCALE

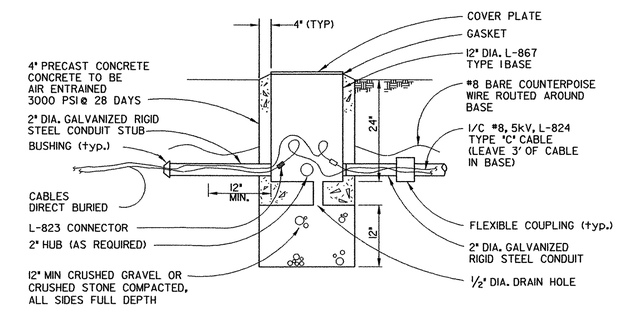

HANDHOLE (7/7)

NOT TO SCALE

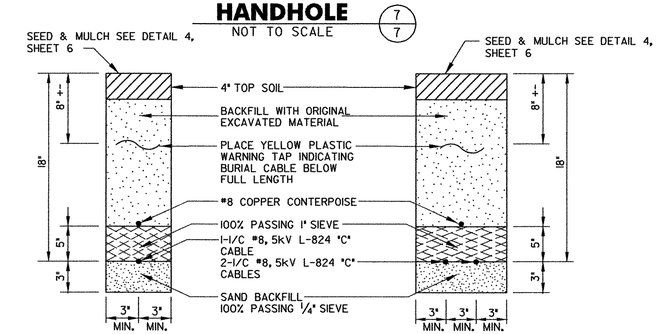

NOTE:

1. SEE SHEET 9 FOR LOCATION.

DIRECT BURIED CABLE TRENCH (8/7)

NOT TO SCALE

Dufresne-Henry

PROJECT NAME: SPRINGFIELD AIR	
PROJECT NUMBER: 04-3161	
FILE NAME: hartness frn.dgn	PLOT DATE: 05/21/2003
PROJECT LEADER: JBL	DRAWN BY: TPL
DESIGNED BY: TPL	CHECKED BY: JBL
ELECTRICAL DETAILS	SHEET 7 OF 17

AM 11:17 05/21/03 G:\Projects\Hartness\Elec\Elec01.dgn